TOSHIBA

PORTABLE SERVICE BOOKLET

Volume One

T100X, T200 series, T1800, T1850 series, T1900 series, T1900S, T1910 series, T1950 series, T2100 series, T2150CD series, T2200SX, T2400 series and T2450CT

TOSHIBA

PORTABLE SERVICE BOOKLET

Volume One

Toshiba Information System (UK) Limited
Corporate Training Department
Toshiba Court
Weybridge Business Park
Addlestone Road
Weybridge
Surrey
KT15 2UL

01932-841600 (Telephone)
01932-852455 (Facsimile)

All registered trademarks are acknowledged
Design specifications subject to change without notice
E & OE

Toshiba Information Systems (UK) Limited
Corporate Training Department

Portable Service Booklet - Volume One
Revision 1.0 (October, 1995)
Document Number H006

Produced by Brian Pearson and Stephen G White
Authored by Stephen G White

If, during the course of using this volume of the Portable Service Booklet, you notice any errors, omissions or ways in which you think the layout or content could be improved, then please send a facsimile detailing your suggestions to the Toshiba Corporate Training Department on 01932-847240

T100X

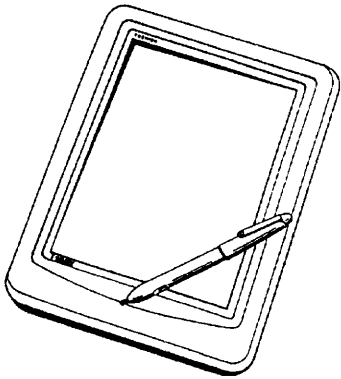

T100X Pen Computer

Section Index

Product Specifications 4
Mains Adapter and Battery Specifications 4
Product Features 4
Battery Release Procedure 5
Upgrade Procedures 6
  Memory Expansion Cards 6
  PCMCIA Cards 7
Setup Screen Layout 8
Disassembly Procedures 9
  Backup and Real Time Clock Batteries 9
  Back Cover. 10
  FL Inverter Board 11
  Hard Disk Drive. 12
  Power Supply Board. 13
  Upper System Board. 14
  Lower System Board and Display Module 15
  Stylus Batteries and Nib 16
Real Mode Memory Map 17
Interrupt Assignments 18
Direct Memory Access Assignments 18
Input/Output Port Assignments 19

T100X Pen Computer

Product Specifications

	T100X
Processor	AMD 386SXLV
Clock Speed	25MHz
Standard Memory	4MBytes
Maximum Memory	20MBytes
Hard Disk Drive	40Mb
Floppy Diskette Drive	1.44MBytes (Ext)
Display Type	LCD
Display Resolution	STN Mono
Display Colour Palette	16 Grey Scales
Internal Modem Slot	Yes (PCMCIA)
Serial Port	Yes
Parallel Port	Yes
Monitor Port	No
PS/2 Mouse Port	No
PS/2 Keyboard Port	Yes
Keyboard Type	N/A
DeskStation Expansion	None
Maximum Battery Life	2.5 Hours
Weight (kg/lb)	1.5/3.3

Mains Adapter and Battery Specifications

Mains Adapter
Toshiba Part Number PA2416U-E
Output Rating 12 volts, 1.7 amps

Battery Pack
Toshiba Part Number PA2414U
Power Rating
1,500 mA/hour, 7.2 volts DC

Product Features

* 3.3 Volt Processor Technology
* Processor Reset Button
* Resume Mode Provision
* Hard-RAM Provision
* Max-Time Power Management
* Two PCMCIA Type II Slots
* Kensington Cable Lock
* PIN Number Security
* NiH_2 Battery

Please refer to the Appendices at the back of this booklet for a description of some of the features described above

Battery Release Procedure

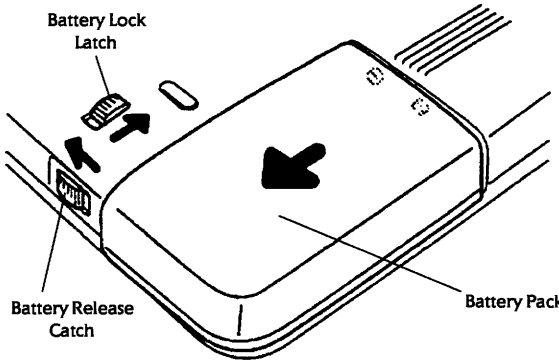

FIGURE ONE

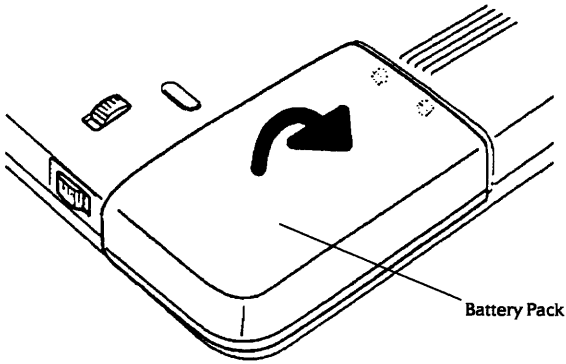

FIGURE TWO

1) Switch the T100X off and disconnect all interconnecting cables including the mains adapter.
2) Turn the T100X upside down and place it on a flat surface.
3) Slide the BATTERY LOCK LATCH towards the centre of the system into its unlocked position (FIGURE ONE).
4) Slide the BATTERY RELEASE CATCH until the BATTERY PACK pops out of the system (FIGURE ONE).
5) Lift the BATTERY PACK out to its right, away from the system (FIGURE TWO).
6) Refit the BATTERY PACK in reverse order ensuring that it is seated correctly and that the BATTERY LOCK LATCH is moved back to its locked position.

Memory Expansion Cards

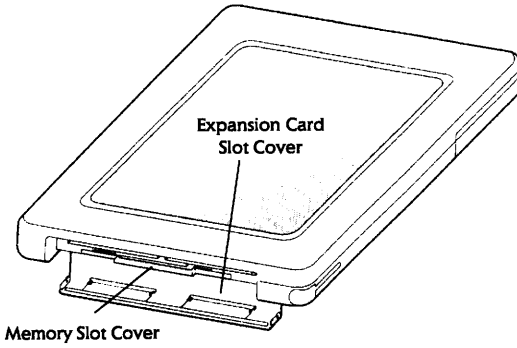

FIGURE ONE

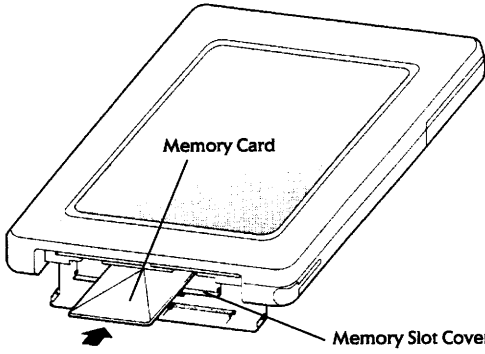

FIGURE TWO

1) Ensure the T100X is configured to start in Boot Mode.
2) Switch the T100X off and disconnect all interconnecting cables including the mains adapter.
3) Open the EXPANSION CARD SLOT COVER on the bottom edge of the computer (FIGURE ONE).
4) Open the MEMORY SLOT COVER located between the two PCMCIA slots (FIGURE ONE).
5) Insert the MEMORY CARD into the MEMORY SLOT ensuring that it is oriented correctly (FIGURE TWO).
6) Close the MEMORY SLOT COVER.
7) Close the EXPANSION CARD SLOT COVER.
8) Turn on the T100X. The system will automatically recognise the additional memory during the boot sequence.

CAUTION **Do not touch the connecting edge of the memory card as debris, oil or grease in or on this connector may cause memory access problems.**

PCMCIA Cards

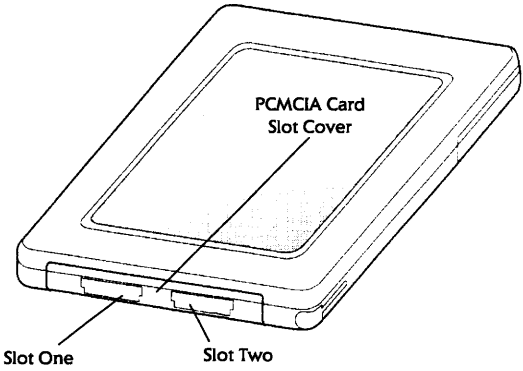

FIGURE ONE

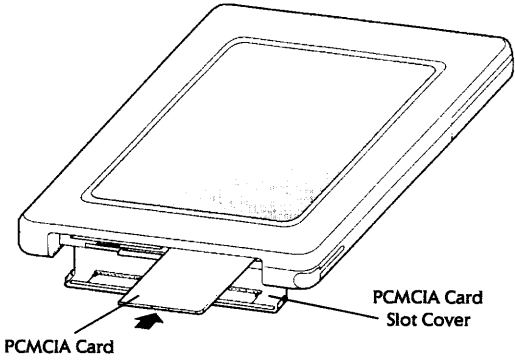

FIGURE TWO

1) Ensure the T100X is configured to start in Boot Mode.
2) Switch the T100X off and disconnect all interconnecting cables including the mains adapter.
3) Open the PCMCIA CARD SLOT COVER on the bottom edge of the computer (FIGURE ONE).
4) Insert the PCMCIA CARD into the either of the two expansion slots ensuring that it is oriented correctly (FIGURE TWO).
5) Close the PCMCIA CARD SLOT COVER.
6) Turn on the T100X. If required you may need to configure the PCMCIA card to operate correctly - refer to the manufacturer's documentation for details on how to achieve this.

CAUTION **Do not touch the connecting edge of the PCMCIA card as debris, oil or grease in or on this connector may cause access problems.**

Setup Screen Layout

[T100X SETUP] Version x.xx

MEMORY		**BATTERY**	
Total	= 4096KB	Battery Save Mode	= Normal Life
Base	= 640KB	Battery Alarm	= On
Shadow Boot ROM	= 128KB	Battery Capacity	= ■■■■■■■F
Hard RAM	= 0KB	**COM/PRT**	
Extended	= 3328KB	Serial Port	= COM1(IRQ4/3F8H)
DISPLAY		PC Card Slot 2	= PCMCIA
LCD Reverse Mode	= Reverse	Printer Port	= Output
HARD DISK		**OTHERS**	
Capacity	= 40MB	Resume Mode	= Boot
POWER ON PASSWORD	= Not Registered	Speaker	= On

↑↓ :Select Items
←→ :Select Values
HOME :Set Defaults
END :Exit

[Hard RAM]

• 0	• 512	• 1024	• 1536	• 2048
• 2560	• 3072	• 3584	• 4096	• 4608
• 5120	• 5632	• 6144	• 6656	• 7168
• 7680	• 8192	• 8704	• 9216	• 9728

PLEASE TAP BELOW

↑	↓		HOME
←	→		END

Note:- In addition to this basic setup screen information, there are a number of pre-configured settings associated with the **Battery Save Mode** option. When selected, these settings affect the way the T100X manages its battery usage as follows:-

Normal Life		**Long Life**	
Processing Speed	= High	Processing Speed	= Low
CPU Sleep Mode	= Disabled	CPU Sleep Mode	= Enabled
HDD Auto Off	= Disabled	HDD Auto Off	= 03Min
Display Auto Off	= Disabled	Display Auto Off	= 03Min
Tablet Auto Off	= Disabled	Tablet Auto Off	= 03Min
System Auto Off*	= Disabled	System Auto Off*	= Disabled
LCD Brightness	= Semi-Bright	LCD Brightness	= Semi-Bright

* The **System Auto Off** option is offered only when the host system is configured for **Resume Mode** operation.

Backup and Real Time Clock Batteries

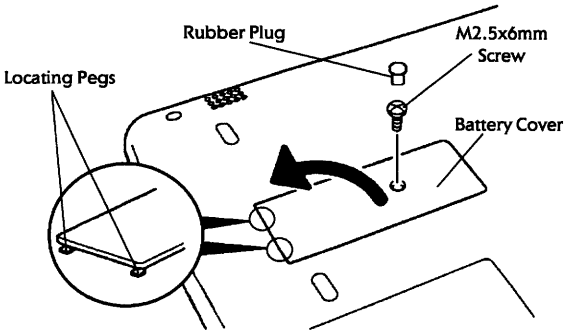

FIGURE ONE

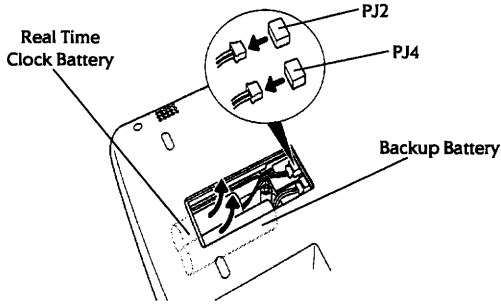

FIGURE TWO

1) Switch the T100X off and disconnect all interconnecting cables including the mains adapter.
2) Remove the BATTERY PACK as described earlier in this section.
3) Turn the T100X around so that the BATTERY PACK compartment is towards you.
4) Prise out the RUBBER PLUG from within the BATTERY COVER and remove the single screw (M2.5x6mm) located beneath it (FIGURE ONE).
5) Lift out the BATTERY COVER taking care to ensure that the LOCATING PEGS on its left hand edge do not get damaged (FIGURE ONE).
6) Lift out the clear plastic insulator covering the batteries noting exactly how it is oriented.
7) Unplug the REAL TIME CLOCK BATTERY from PJ2 and the BACKUP BATTERY from PJ4 and slide them out of the battery compartment (FIGURE TWO).

   Note:- Both batteries have dissimilar plug formats to prevent them being connected incorrectly.

8) Refit the BACKUP BATTERY and the REAL TIME CLOCK BATTERY in reverse order.

Back Cover

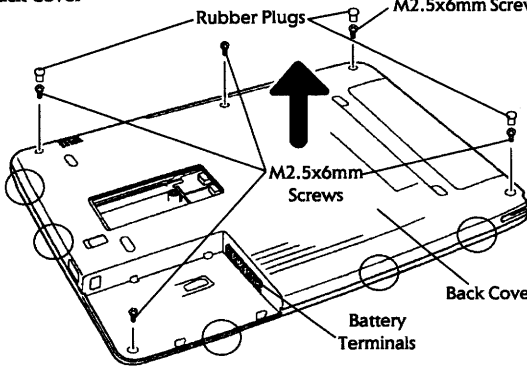

FIGURE THREE

1) Switch the T100X off and disconnect all interconnecting cables including the mains adapter.
2) Remove the BATTERY PACK as described earlier in this section.
3) Should they be installed, remove any PCMCIA CARDS and/or MEMORY CARDS as described earlier in this section.
4) Follow all instructions as detailed under the disassembly procedure **Backup and Real Time Clock Batteries** before proceeding.
5) Prise out the three RUBBER PLUGS from around the edge of the BACK COVER (FIGURE THREE).
6) Remove the five screws (M2.5x6mm) securing the BACK COVER (FIGURE THREE).
7) With the BATTERY PACK compartment towards you, carefully separate the BACK COVER from the front cover at its top right hand corner, working around the case anticlockwise until the two latches on the left hand edge (circled) are released (FIGURE THREE).
8) Pivot the BACK COVER upwards and towards you in order to release the three remaining latches (circled) along the front edge (FIGURE THREE).

Note:- While performing this step ensure that care is taken not to damage the BATTERY TERMINALS.

8) Refit the BACK COVER in reverse order.

FL Inverter Board

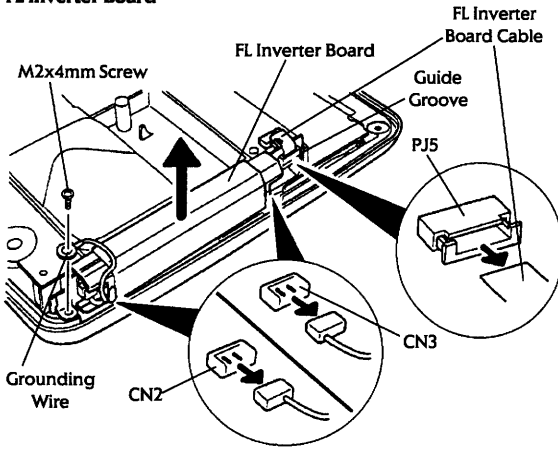

FIGURE FOUR

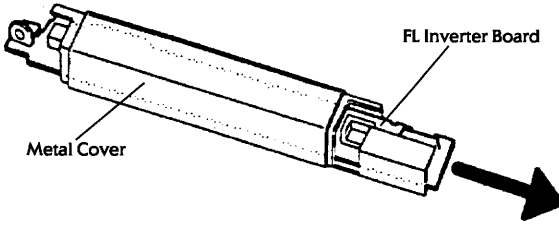

FIGURE FIVE

1) Switch the T100X off and disconnect all interconnecting cables including the mains adapter.
2) Remove the BATTERY PACK as described earlier in this section.
3) Should they be installed, remove any PCMCIA CARDS and/or MEMORY CARDS as described earlier in this section.
4) Follow all instructions as detailed under the disassembly procedures **Backup and Real Time Clock Batteries** and **Back Cover** before proceeding.
5) Turn the T100X around so that the side with the HARD DISK DRIVE and FL INVERTER BOARD within it is towards you.
6) Remove the screw (M2x4mm) securing the GROUNDING WIRE and the FL INVERTER BOARD (FIGURE FOUR).
7) If present, peel back the tape covering socket PJ5.
8) Release the locking pegs on ZIF socket PJ5 and carefully withdraw the FL INVERTER BOARD CABLE (FIGURE FOUR).
9) Carefully lift out the FL INVERTER BOARD, disconnecting the connectors at CN2 and CN3 (FIGURE FOUR).
10) If required, the FL INVERTER BOARD can be removed from its METAL COVER by sliding it out as indicated (FIGURE FIVE).
11) Refit the FL INVERTER BOARD in reverse order ensuring that it is located correctly within the GUIDE GROOVE (FIGURE FOUR).

Hard Disk Drive

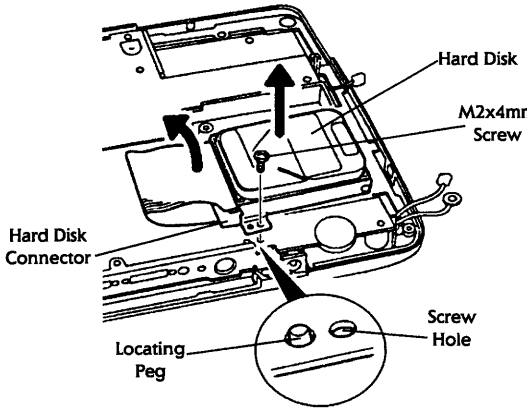

FIGURE SIX

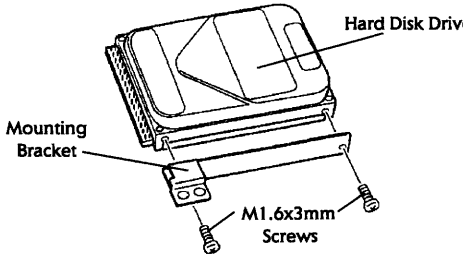

FIGURE SEVEN

1) Switch the T100X off and disconnect all interconnecting cables including the mains adapter.
2) Remove the BATTERY PACK as described earlier in this section.
3) Should they be installed, remove any PCMCIA CARDS and/or MEMORY CARDS as described earlier in this section.
4) Follow all instructions as detailed under the disassembly procedures **Backup and Real Time Clock Batteries** and **Back Cover** before proceeding.
5) Turn the T100X around so that the side with the interface connectors on it is towards you.
6) Remove the screw (M2x4mm) securing the MOUNTING BRACKET (FIGURE SIX).
7) Lift the HARD DISK DRIVE out of the system unit to full expose the HARD DISK CONNECTOR (FIGURE SIX).
8) Disconnect the HARD DISK CONNECTOR by prising it vertically off of the HARD DISK DRIVE (FIGURE SIX).
9) Remove the two screws (M1.6x3mm) securing the MOUNTING BRACKET to the HARD DISK and remove it (FIGURE SEVEN).
10) Refit the HARD DISK in reverse order ensuring that the HARD DISK CONNECTOR is correctly aligned on the two rows of pins on the HARD DISK DRIVE.

Power Supply Board

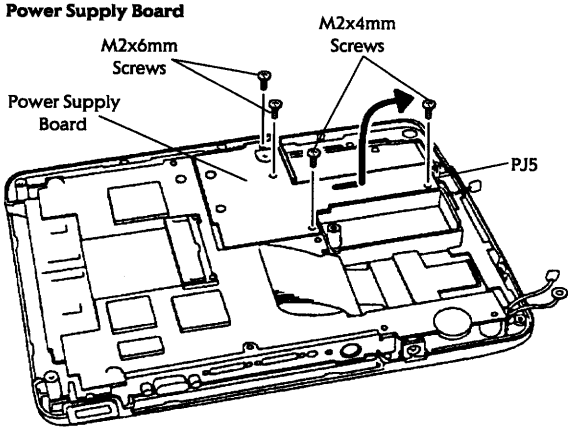

FIGURE EIGHT

1) Switch the T100X off and disconnect all interconnecting cables including the mains adapter.
2) Remove the BATTERY PACK as described earlier in this section.
3) Should they be installed, remove any PCMCIA CARDS and/or MEMORY CARDS as described earlier in this section.
4) Follow all instructions as detailed under the disassembly procedures **Backup and Real Time Clock Batteries** and **Back Cover** before proceeding.
5) Turn the T100X around so that the side with the interface connectors on it is towards you.
6) Remove the four screws (M2x4mm and M2x6mm) securing the POWER SUPPLY BOARD (FIGURE EIGHT).
7) If the FL INVERTER BOARD is still fitted, release the ZIF socket at PJ5 and carefully withdraw the FL INVERTER BOARD CABLE (FIGURE EIGHT).
8) Lift the edge of the POWER SUPPLY BOARD at PJ5, pull it to the right to disconnect it from the system board and remove it from the system.
9) Refit the POWER SUPPLY BOARD in reverse order.

Upper System Board

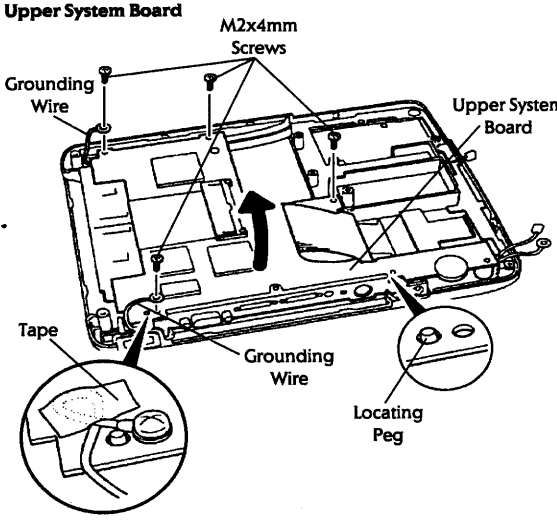

FIGURE NINE

1) Switch the T100X off and disconnect all interconnecting cables including the mains adapter.
2) Remove the BATTERY PACK as described earlier in this section.
3) Should they be installed, remove any PCMCIA CARDS and/or MEMORY CARDS as described earlier in this section.
4) Follow all instructions as detailed under the disassembly procedures **Backup and Real Time Clock Batteries, Back Cover, FL Inverter Board, Hard Disk Drive** and **Power Supply Board** before proceeding.
5) Turn the T100X around so that the side with the interface connectors on it is towards you.
6) If present, remove the TAPE covering the GROUNDING WIRE at the bottom left hand corner of the system (FIGURE NINE).
7) Remove the four screws (M2x4mm) securing the UPPER SYSTEM BOARD (FIGURE NINE).
8) Lift the edge of the UPPER SYSTEM BOARD at the interface connectors and carefully pivot it upwards and away from you ensuring that it is supported at all times to avoid stressing the interconnecting cable.
9) Refit the UPPER SYSTEM BOARD in reverse order.

Lower System Board and Display Module

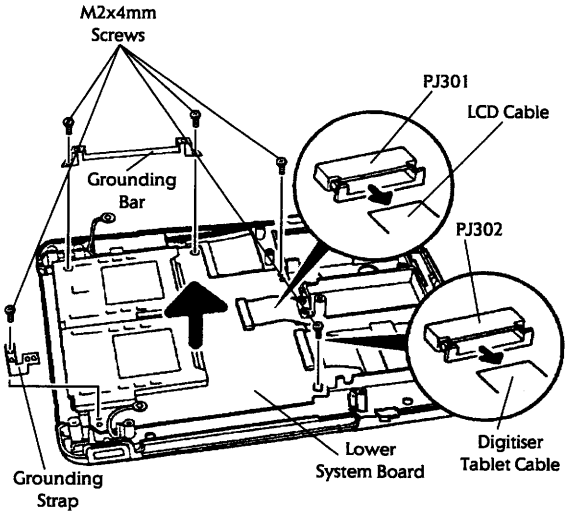

FIGURE TEN

1) Switch the T100X off and disconnect all interconnecting cables including the mains adapter.
2) Remove the BATTERY PACK as described earlier in this section.
3) Should they be installed, remove any PCMCIA CARDS and/or MEMORY CARDS as described earlier in this section.
4) Follow all instructions as detailed under the disassembly procedures **Backup and Real Time Clock Batteries, Back Cover, FL Inverter Board, Hard Disk Drive, Power Supply Board** and **Upper System Board** before proceeding.
5) Turn the T100X around so that the side with the power switch on it is towards you.
6) Remove the five screws (M2x4mm) securing the LOWER SYSTEM BOARD (FIGURE TEN).
7) Lift off the GROUNDING STRAP from the bottom left hand corner of the system (FIGURE TEN).
8) Lift off the GROUNDING BAR from the top left hand corner of the system (FIGURE TEN).
9) Release the locking pegs on ZIF sockets PJ301 and PJ302 and carefully withdraw the LCD CABLE and the DIGITISER TABLET CABLE respectively (FIGURE TEN).
10) Carefully lift the LOWER SYSTEM BOARD out of the system unit ensuring that both it and the UPPER SYSTEM BOARD are adequately supported at all times (FIGURE TEN).
11) Refit the LOWER SYSTEM BOARD in reverse order.

Note :- The remaining item is the DISPLAY MODULE. Do not attempt to dismantle this assembly further as doing so may cause damage to either the screen or digitiser modules.

Stylus Batteries and Nib

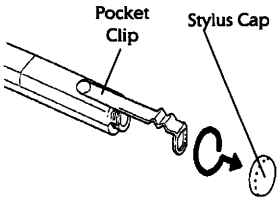

FIGURE ELEVEN

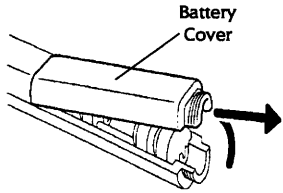

FIGURE TWELVE

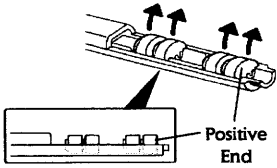

FIGURE THIRTEEN

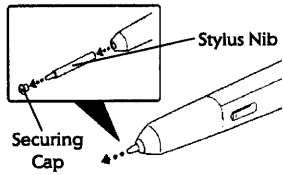

FIGURE FOURTEEN

Stylus Battery Replacement Procedure

1) Unscrew the STYLUS CAP and remove the POCKET CLIP (FIGURE ELEVEN).
2) Lift up the threaded end of the BATTERY COVER and slide it away from the stylus (FIGURE TWELVE).
3) Install either one or two pairs of batteries ensuring they are oriented correctly (FIGURE THIRTEEN).
4) Replace the BATTERY COVER, POCKET CLIP and STYLUS CAP.

Stylus Nib Replacement Procedure

1) Prise off the SECURING CAP that surrounds the STYLUS NIB with a scalpel (FIGURE FOURTEEN).
2) Grasp the STYLUS NIB with a pair of tweezers and remove it from the stylus (FIGURE FOURTEEN).
3) Install a new STYLUS NIB ensuring that it is seated correctly.
4) Replace the SECURING CAP ensuring that it clicks securely in place.

Real Mode Memory Map

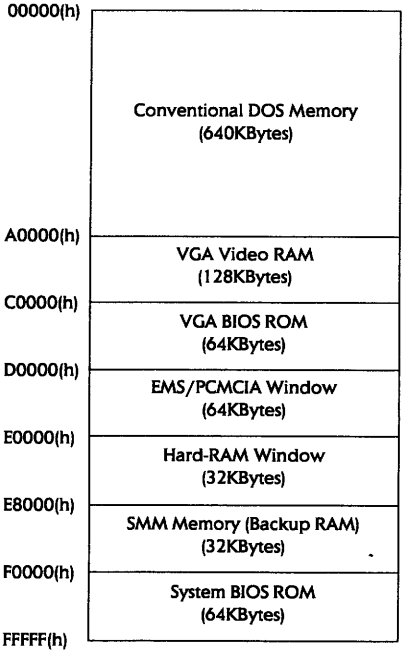

Interrupt Assignments

Interrupt Controller	Interrupt Level	Interrupt Assignment
-	NMI	RAM Parity Error, I/O Channel Error
1	0	Timer
	1	Keyboard
	2	Interrupt Controller for Levels 8 to 15
	3	COM2:
	4	COM1:
	5	COM3: (Tablet)
	6	Floppy Diskette Controller
	7	Printer (LPT1:)
2	8	Real Time Clock
	9	Software Redirect to INT 0A(h)
	10	Reserved
	11	Reserved
	12	Reserved
	13	Math Co-Processor (Not Used)
	14	Hard Disk Controller
	15	Reserved

Direct Memory Access Assignments

DMA Controller	Channel Number	DMA Assignment
1	0	Not Used
	1	Reserved
	2	Floppy Diskette Drive
	3	Reserved
2	4	Cascade for DMA Controller One
	5	Reserved
	6	Reserved
	7	Not Used

Input/Output Port Assignments

I/O Port Address	Device/Function
000(h) to 01F(h)	82C37 - DMA Controller One
020(h) to 03F(h)	82C59 - Programmable Interrupt Controller One
040(h) to 05F(h)	82C54 - Timer
060(h) to 06F(h)	80C42 - Keyboard Controller
070(h)	NMI Mask Register
070(h) to 07F(h)	Real Time Clock
080(h) to 09F(h)	DMA Page Register
0A0(h) to 0BF(h)	82C59 - Programmable Interrupt Controller Two
0C0(h) to 0DF(h)	82C37 - DMA Controller Two
0E0(h) to 0EF(h)	Special Register
0F0(h) to 0F7(h)	Not Used
100(h) to 1EF(h)	VGA
1F0(h) to 1FF(h)	Hard Disk Controller
200(h) to 2F7(h)	Not Used
2F8(h) to 2FF(h)	COM2:
300(h) to 377(h)	Not Used
378(h) to 37F(h)	Printer (LPT1:)
380(h) to 3DF(h)	Not Used
3E0(h) to 3E1(h)	PC Card Controller
3E2(h) to 3E7(h)	Not Used
3E8(h) to 3EF(h)	COM3: (Tablet)
3F0(h) to 3F7(h)	Floppy Diskette Controller
3F8(h) to 3FF(h)	COM1:

This page is intentionally left blank

T200
Range

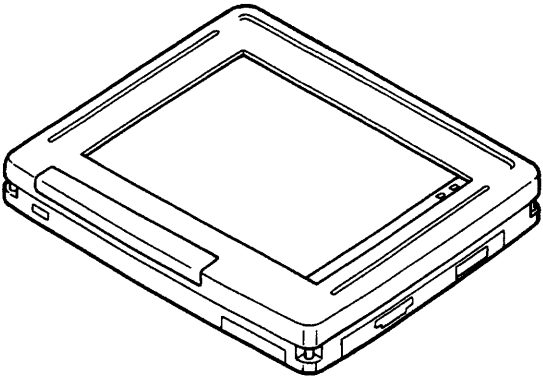

T200 Pen Computer Range

Section Index

Product Specifications 22
Mains Adapter and Battery Specifications 22
Product Features 22
Battery Release Procedure 23
Upgrade Procedures 24
  Memory Expansion Cards 24
  PCMCIA Cards 25
Setup Screen Layout 26
Disassembly Procedures 28
  Hard Disk Drive 28
  Back Cover. 29
  Upper System Board, Backup Battery and RTC Battery. . 30
  FL Inverter 32
  Lower System Board - T200 33
  Tablet - T200 34
  Fluorescent Lamp Unit and Display Module - T200 . . 36
  Lower System Board - T200CS 37
  Tablet - T200CS 38
  Fluorescent Lamp Unit and Display Module - T200CS . . 40
  Stylus Nib 41
Real Mode Memory Map 41
Interrupt Assignments 42
Direct Memory Access Assignments 42
Input/Output Port Assignments 43

T200 Pen Computer Range

Product Specifications

	T200	T200CS
Processor	i80486DX/2	i80486DX/2
Clock Speed	40MHz	40MHz
Standard Memory	4MBytes	4MBytes
Maximum Memory	20MBytes	20MBytes
Hard Disk Drive	80Mb	80Mb
Floppy Diskette Drive	1.44MBytes (Ext)	1.44MBytes (Ext)
Display Type	STN Mono	STN Colour
Display Resolution	VGA/S-VGA	VGA/S-VGA
Display Colour Palette	64 Grey Scales	256 Colours
Internal Modem Slot	Yes (PCMCIA)	Yes (PCMCIA)
Serial Port	Yes	Yes
Parallel Port	Yes	Yes
Monitor Port	Yes	Yes
PS/2 Mouse Port	No	No
PS/2 Keyboard Port	Yes	Yes
Keyboard Type	N/A	N/A
DeskStation Expansion	Port Replicator Only	Port Replicator Only
Maximum Battery Life	3 Hours	3 Hours
Weight (kg/lb)	1.8/4.0	2.0/4.4

Mains Adapter and Battery Specifications

Mains Adapter
Toshiba Part Number PA2426U
Output Rating 15 volts, 1.4 amps

Battery Pack
Toshiba Part Number PA2427U-R
Power Rating
3,000 mA/hour, 10.8 volts DC

Product Features

* 3.3 Volt Processor Technology
* Processor Reset Button
* Resume Mode Provision
* Max-Time Power Management
* Advanced Power Management
* VESA Local Bus Graphics
* BitBlk Graphics Accelerator
* Kensington Cable Lock
* 800x600x256 External S-VGA
* 1024x768x256 External S-VGA
* PCMCIA Type II Slot
* PCMCIA Type III Slot (10.5mm)
* PIN Number Security
* Lithium Ion Battery
* Flash BIOS Firmware

Please refer to the Appendices at the back of this booklet for a description of some of the features described above

Battery Release Procedure

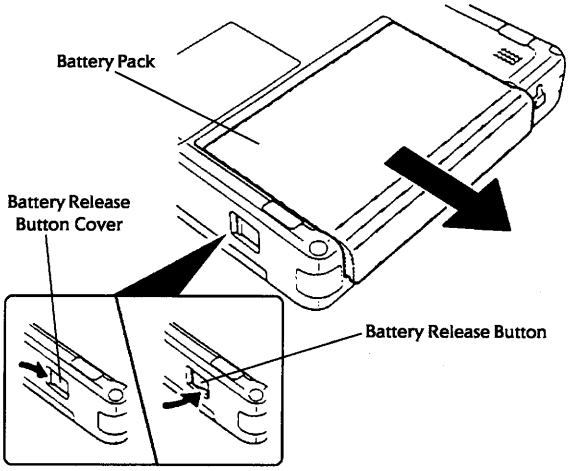

FIGURE ONE

1) Switch the T200 off and disconnect all interconnecting cables including the mains adapter.
2) Turn the T200 upside down and place it on a flat surface with its front edge towards you.
3) Slide the BATTERY RELEASE BUTTON COVER towards the front of the system and press the BATTERY RELEASE BUTTON located behind it (FIGURE ONE). The BATTERY PACK will pop out slightly.
4) Grasp the BATTERY PACK and remove it from the system (FIGURE ONE).
5) Refit the BATTERY PACK by sliding it back into the system, ensuring that it is locked firmly in place.

Memory Expansion Cards

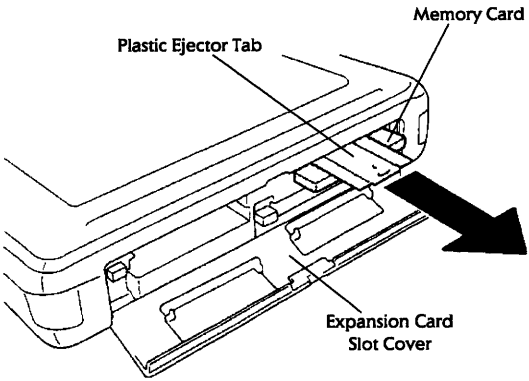

FIGURE ONE

1) Ensure the T200 is configured to start in Boot Mode.
2) Switch the T200 off and disconnect all interconnecting cables including the mains adapter.
3) Open the EXPANSION CARD SLOT COVER on the right hand edge of the computer (FIGURE ONE).
4) Insert the MEMORY CARD ensuring that it is oriented correctly (FIGURE ONE).

4a) Remove the MEMORY CARD by grasping the PLASTIC EJECTOR TAB and pulling it outwards (FIGURE ONE).

5) Close the EXPANSION CARD SLOT COVER.
6) Turn on the T200. The system will automatically recognise the additional memory during the boot sequence.

CAUTION **Do not touch the connecting edge of the memory card as debris, oil or grease in or on this connector may cause memory access problems.**

PCMCIA Cards

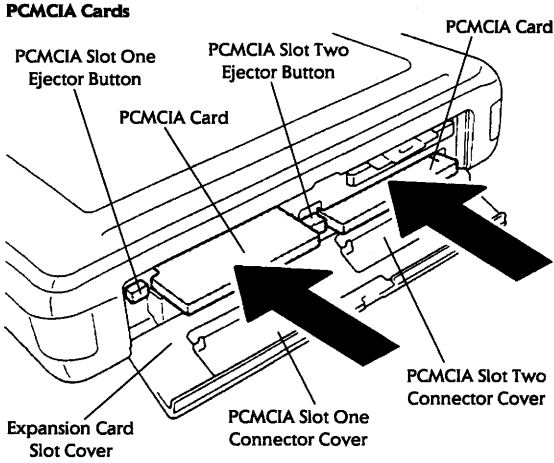

FIGURE ONE

1) Ensure the T200 is configured to start in Boot Mode.
2) Switch the T200 off and disconnect all interconnecting cables including the mains adapter.
3) Open the EXPANSION CARD SLOT COVER on the right hand edge of the computer (FIGURE ONE).
4) Insert the PCMCIA CARD into the either of the two expansion slots ensuring that it is oriented correctly (FIGURE ONE).

4a) To remove the PCMCIA CARD press either the PCMCIA SLOT ONE EJECTOR BUTTON or the PCMCIA SLOT TWO EJECTOR BUTTON as required (FIGURE ONE). The PCMCIA CARD will be partially ejected from the system allowing it to be grasped and completely removed.

5) If the PCMCIA CARD requires an external interface, open either the PCMCIA SLOT ONE CONNECTOR COVER or the PCMCIA SLOT TWO CONNECTOR COVER within the EXPANSION CARD SLOT COVER as required (FIGURE ONE).
6) Turn on the T200. If required you may need to configure the PCMCIA card to operate correctly - refer to the manufacturer's documentation for details on how to achieve this.

Note:- If you are installing either a Type I (3.3mm) or a Type II (5.0mm) PCMCIA CARD you may insert it into either Slot One or Slot Two. If you are installing a Type III (10.5mm) PCMCIA CARD you may only insert it into Slot One.

CAUTION **Do not touch the connecting edge of the PCMCIA card as debris, oil or grease in or on this connector may cause access problems.**

Setup Screen Layout

T200 (Monochrome Version)

T200 SETUP — BIOS version = x.xx

MEMORY		BATTERY	
Total	= 4096KB	Battery Save Mode	= Full Power
Base	= 640KB	Remaining Capacity	= EEEEEEEEF
Extended	= 3328KB		
Shadow BIOS ROM	= 128KB	**PASSWORD**	
		Not Registered	
DISPLAY			
Display Adaptor	= VGA Compatible	**OTHERS**	
LCD Display Mode	= Color	Power-up Mode	= Boot
LCD Gray Scale Level	= Reverse 16 Levels	CPU Cache	= Enabled
Power On Display	= Internal/External	Processing Speed	= High
		Speaker	= On
COM/PCMCIA/PRT		Alarm Power On	= Disabled
Serial Port	= COM1 (IRQ4/3F8H)	Boot Priority	= FDD →HDD
PC Card Slot 1	= PCMCIA		
PC Card Slot 2	= PCMCIA		
Printer Port Type	= Output		
HARD DISK			
Capacity	= 80MB		

↑↓←→:Select Items — Home:Set default values
Space,BkSp:Change values — Esc:Exit without saving
End:Save changes and exit

PLEASE TAP BELOW				
	↑			Home
←	↓	→		Esc
Space	BkSp			End

Note:- In addition to this basic setup screen information, there are a number of pre-configured settings associated with the **Battery Save Mode** option. When selected, these settings affect the way the T200 manages its battery usage as follows:-

Low Power		Full Power	
CPU Sleep Mode	= Enabled	CPU Sleep Mode	= Disabled
Display Auto Off	= 03Min.	Display Auto Off	= Disabled
HDD Auto Off	= 03Min.	HDD Auto Off	= Disabled
System Auto Off*	= 30Min.	System Auto Off*	= Disabled
LCD Brightness	= Semi-Bright	LCD Brightness	= Bright

* The **System Auto Off** option is offered only when the host system is configured for **Resume Mode** operation.

T200CS (STN Colour Version)

T200CS SETUP — BIOS version = x.xx

MEMORY		BATTERY	
Total	= 4096KB	Battery Save Mode	= Full Power
Base	= 640KB	Remaining Capacity	= [redacted]F
Extended	= 3328KB		
Shadow BIOS ROM	= 128KB	**PASSWORD**	
		Not Registered	
DISPLAY		**OTHERS**	
Display Adaptor	= VGA Compatible	Power-up Mode	= Boot
LCD Display Mode	= Color	CPU Cache	= Enabled
Power On Display	= Internal/External	Processing Speed	= High
		Speaker	= On
COM/PCMCIA/PRT		Alarm Power On	= Disabled
Serial Port	= COM1 (IRQ4/3F8H)	Boot Priority	= FDD → HDD
PC Card Slot 1	= PCMCIA		
PC Card Slot 2	= PCMCIA		
Printer Port Type	= Output		
HARD DISK			
Capacity	= 80MB		

↑↓←→:Select Items — Home:Set default values
Space,BkSp:Change values — Esc:Exit without saving
End:Save changes and exit

PLEASE TAP BELOW				
	↑			Home
←	↓	→		Esc
Space	BkSp			End

Note:- In addition to this basic setup screen information, there are a number of pre-configured settings associated with the **Battery Save Mode** option. When selected, these settings affect the way the T200CS manages its battery usage as follows:-

Low Power		Full Power	
CPU Sleep Mode	= Enabled	CPU Sleep Mode	= Disabled
Display Auto Off	= 03Min.	Display Auto Off	= 30Min.
HDD Auto Off	= 03Min.	HDD Auto Off	= Disabled
System Auto Off*	= 30Min.	System Auto Off*	= Disabled
LCD Brightness	= Semi-Bright	LCD Brightness	= Bright

* The **System Auto Off** option is offered only when the host system is configured for **Resume Mode** operation.

Hard Disk Drive

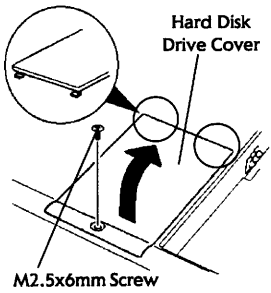

FIGURE ONE

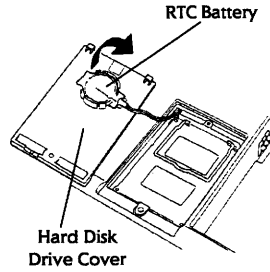

FIGURE TWO

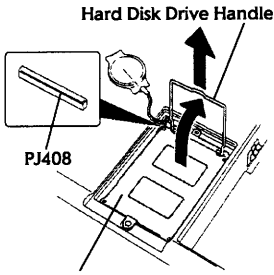

FIGURE THREE

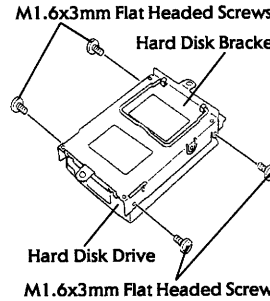

FIGURE FOUR

1) Switch the T200 off and disconnect all interconnecting cables including the mains adapter.
2) Remove the BATTERY PACK as described earlier in this section.
3) Should they be installed, remove any PCMCIA cards and/or the MEMORY CARD as described earlier in this section.
4) Turn the T200 upside down and place it on a flat surface with its front edge towards you.
5) Remove the screw (M2.5x6mm) securing the HARD DISK DRIVE COVER, pivot it towards the rear of the computer to release the securing latches (circled) and lift it away from the system unit noting that it will be held captive by the RTC BATTERY clipped to its underside (FIGURE ONE and FIGURE TWO).
6) Carefully unclip the RTC BATTERY from the underside of the HARD DISK DRIVE COVER and remove the HARD DISK DRIVE COVER from the system unit (FIGURE TWO).
7) Using the HARD DISK DRIVE HANDLE lift the HARD DISK DRIVE PACK out of the system unit, disconnecting it from PJ408 on the LOWER SYSTEM BOARD (FIGURE THREE).
8) Remove the four screws (M1.6x3mm Flat Headed) securing the HARD DISK BRACKET to the HARD DISK DRIVE and remove the HARD DISK DRIVE from it (FIGURE FOUR).
9) Refit the HARD DISK DRIVE in reverse order ensuring that it is correctly positioned above connector PJ408 before being pressed into place.

Back Cover

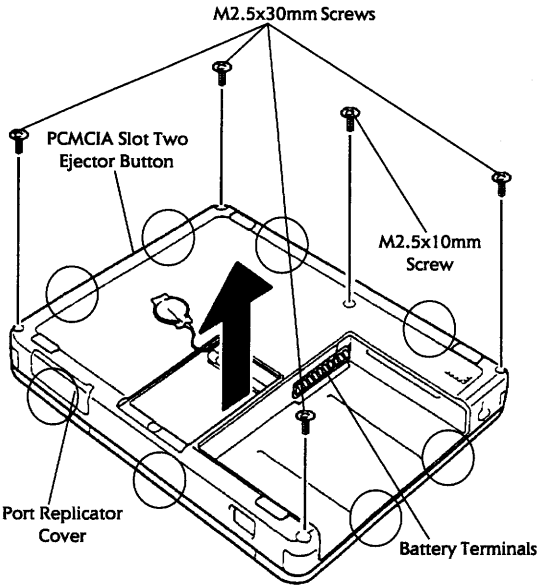

FIGURE FIVE

1) Switch the T200 off and disconnect all interconnecting cables including the mains adapter.
2) Remove the BATTERY PACK as described earlier in this section.
3) Should they be installed, remove any PCMCIA cards and/or the MEMORY CARD as described earlier in this section.
4) Follow all instructions as detailed under the disassembly procedure **Hard Disk Drive** before proceeding.
5) Remove the five screws (M2.5x10mm and M2.5x30mm) securing the BACK COVER (FIGURE FIVE).
6) Carefully release the eight latches securing the BACK COVER and lift it away from the system unit (FIGURE FIVE).

Note :- During this procedure ensure that the following steps are observed to avoid damaging the computer in any way:-

a) Depress the PCMCIA SLOT TWO EJECTOR BUTTON to prevent it obstructing the BACK COVER.
b) Gently press in the PORT REPLICATOR COVER to prevent it obstructing the BACK COVER.
c) Ensure the BACK COVER does not catch on the BATTERY TERMINALS and damage them.

7) Refit the BACK COVER in reverse order ensuring that care is taken to avoid damaging either the BATTERY TERMINALS, the PORT REPLICATOR COVER or the PCMCIA SLOT TWO EJECTOR BUTTON.

Upper System Board, Backup Battery and RTC Battery

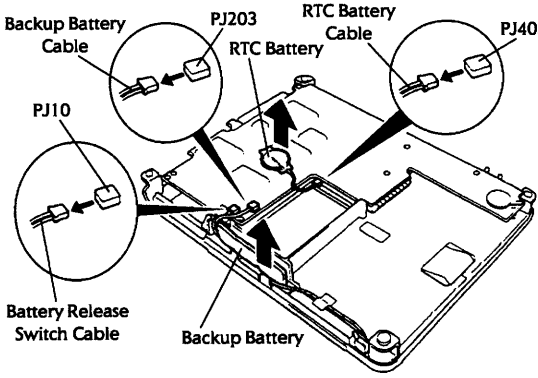

FIGURE SIX

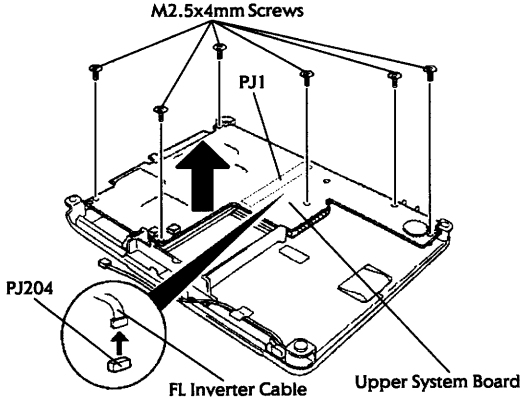

FIGURE SEVEN

1) Switch the T200 off and disconnect all interconnecting cables including the mains adapter.
2) Remove the BATTERY PACK as described earlier in this section.
3) Should they be installed, remove any PCMCIA cards and/or the MEMORY CARD as described earlier in this section.
4) Follow all instructions as detailed under the disassembly procedures **Hard Disk Drive** and **Back Cover** before proceeding.
5) If present, remove any tape covering the BACKUP BATTERY and/or connectors PJ10 and PJ203 (FIGURE SIX).
6) Unplug the BATTERY RELEASE SWITCH CABLE from PJ10 and the BACKUP BATTERY CABLE from PJ203 and remove the BACKUP BATTERY from the system unit noting how it, its cable and the BATTERY RELEASE SWITCH CABLE are located within the clear plastic housing at the front edge of the computer (FIGURE SIX).

/continued/

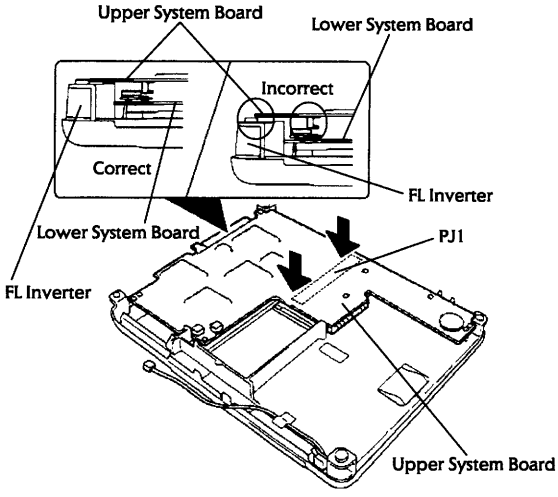

FIGURE EIGHT

7) Unplug the RTC BATTERY CABLE from PJ403 on the LOWER SYSTEM BOARD and remove the RTC BATTERY from the system unit noting how its cable is routed behind the black plastic lining within the HARD DISK DRIVE compartment (FIGURE SIX overleaf).
8) Remove the six screws (M2.5x4mm) securing the UPPER SYSTEM BOARD into the system unit (FIGURE SEVEN overleaf).
9) Partially lift the UPPER SYSTEM BOARD out of the system unit in order to disconnect its connector PJ1 from PJ401 on the LOWER SYSTEM BOARD (FIGURE SEVEN overleaf).

Note:- Do not attempt to remove the UPPER SYSTEM BOARD at this point as it is still connected to the FL INVERTER.

10) Carefully pivot the UPPER SYSTEM BOARD towards the back of the system unit to fully expose the FL INVERTER CABLE.
11) Unplug the FL INVERTER CABLE from PJ204 on the UPPER SYSTEM BOARD and remove the UPPER SYSTEM BOARD from the system unit (FIGURE SEVEN overleaf).
12) Refit the UPPER SYSTEM BOARD, RTC BATTERY and BACKUP BATTERY in reverse order ensuring that the following points are observed:-

    a) The UPPER SYSTEM BOARD is correctly positioned before the connectors PJ1 and PJ401 are pressed together (FIGURE EIGHT). This is to prevent any damage to either the UPPER SYSTEM BOARD, LOWER SYSTEM BOARD or the FL INVERTER arising from misalignment at the points indicated (circled).
    b) The BACKUP BATTERY CABLE and BATTERY RELEASE SWITCH CABLE are correctly positioned within the clear plastic housing at the front edge of the computer.

FL Inverter

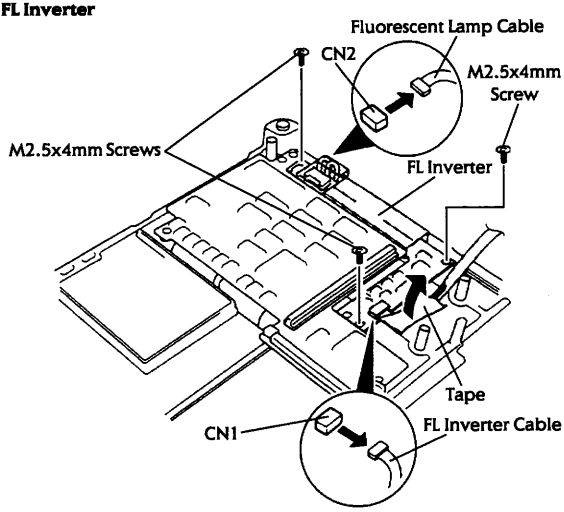

FIGURE NINE

1) Switch the T200 off and disconnect all interconnecting cables including the mains adapter.
2) Remove the BATTERY PACK as described earlier in this section.
3) Should they be installed, remove any PCMCIA cards and/or the MEMORY CARD as described earlier in this section.
4) Follow all instructions as detailed under the disassembly procedures **Hard Disk Drive, Back Cover** and **Upper System Board, Backup Battery and RTC Battery** before proceeding.
5) If present, peel back any TAPE covering either the FL INVERTER CABLE and/or the FLUORESCENT LAMP CABLE (FIGURE NINE).
6) Disconnect the FL INVERTER CABLE from CN1 and the FLUORESCENT LAMP CABLE from CN2 on the FL INVERTER (FIGURE NINE).
7) Remove the three screws (M2.5x4mm) securing the FL INVERTER and lift it out of the system unit (FIGURE NINE).
8) Refit the FL INVERTER in reverse order.

Lower System Board - T200

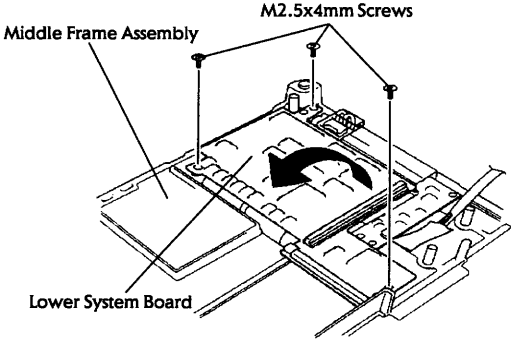

FIGURE TEN

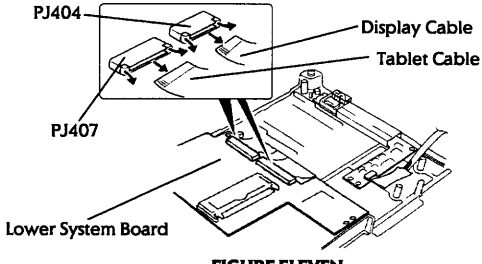

FIGURE ELEVEN

1) Switch the T200 off and disconnect all interconnecting cables including the mains adapter.
2) Remove the BATTERY PACK as described earlier in this section.
3) Should they be installed, remove any PCMCIA cards and/or the MEMORY CARD as described earlier in this section.
4) Follow all instructions as detailed under the disassembly procedures **Hard Disk Drive, Back Cover** and **Upper System Board, Backup Battery and RTC Battery** before proceeding.
5) If present, peel back any tape covering the screws securing the LOWER SYSTEM BOARD.
6) Remove the three screws (M2.5x4mm) securing the LOWER SYSTEM BOARD and carefully pivot it over to lie on top of the HARD DISK DRIVE compartment (FIGURE TEN).
7) Carefully release the locking pegs on ZIF connector PJ404 and withdraw the DISPLAY CABLE from within it (FIGURE ELEVEN).
8) Carefully release the locking pegs on ZIF connector PJ407 and withdraw the TABLET CABLE from within it (FIGURE ELEVEN).
9) Lift the LOWER SYSTEM BOARD out of the system unit noting how the black plastic sheet on its top edge is folded underneath the casing assembly.
10) Refit the LOWER SYSTEM BOARD in reverse order ensuring that the black plastic sheet on its top edge is correctly folded underneath the MIDDLE FRAME ASSEMBLY.

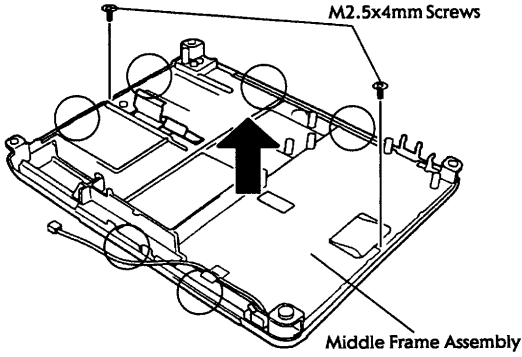

FIGURE TWELVE

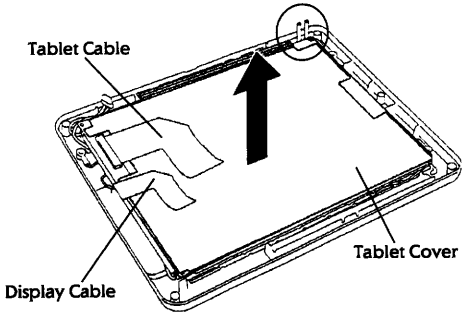

FIGURE THIRTEEN

1) Switch the T200 off and disconnect all interconnecting cables including the mains adapter.
2) Remove the BATTERY PACK as described earlier in this section.
3) Should they be installed, remove any PCMCIA cards and/or the MEMORY CARD as described earlier in this section.
4) Follow all instructions as detailed under the disassembly procedures**Hard Disk Drive, Back Cover, Upper System Board, Backup Battery and RTC Battery, FL Inverter** and **Lower System Board - T200** before proceeding.
5) Remove the two screws (M2.5x4mm) securing the MIDDLE FRAME ASSEMBLY (FIGURE TWELVE).
6) Carefully release the six latches (circled) securing the MIDDLE FRAME ASSEMBLY and lift it out of the system unit (FIGURE TWELVE).

Note:- During this procedure the metal posts located at each corner of the MIDDLE FRAME ASSEMBLY may slide out of their locating holes. If this occurs then these posts must be replaced during the reassembly process.

/continued/

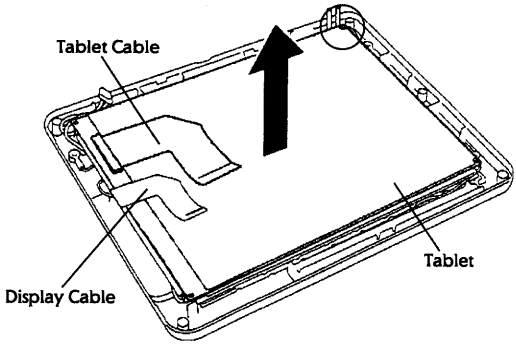

FIGURE FOURTEEN

7) If present, remove any tape securing either the TABLET CABLE and/ or the DISPLAY CABLE to the TABLET COVER (FIGURE THIRTEEN overleaf).
8) If present, remove any tape securing the TABLET COVER to the TABLET itself.
9) Lift the TABLET COVER out of the system unit ensuring that (a) care is taken not to damage the clear plastic light conductors (circled), and (b) a note is made as to how it is positioned beneath the TABLET CABLE (FIGURE THIRTEEN overleaf).
10) Carefully lift the TABLET out of the system unit noting how it is located on the plastic lug (circled) at its top right hand corner (FIGURE FOURTEEN).

Note:- The TABLET itself is extremely fragile and should not be subjected to any adverse bends or twists.

11) Refit the TABLET in reverse order ensuring that the following points are observed:-

a) The TABLET is located correctly on the plastic lug at its top right hand corner.
b) Both the TABLET COVER and MIDDLE FRAME ASSEMBLY are replaced carefully to avoid damage to either the TABLET CABLE or the clear plastic light conductors.
c) Any metal posts that slid out from the corners of the MIDDLE FRAME ASSEMBLY are replaced.
d) The FLUORESCENT LAMP CABLE is fed through the rectangular recess at the rear left hand corner of the MIDDLE FRAME ASSEMBLY when the latter is replaced.
e) The TABLET CABLE and DISPLAY CABLE are fed through the rectengular hole at the left hand side of the MIDDLE FRAME ASSEMBLY when the latter is replaced.

Fluorescent Lamp Unit and Display Module - T200

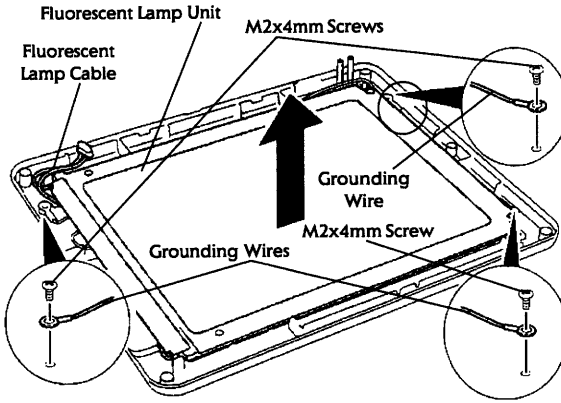

FIGURE FIFTEEN

1) Switch the T200 off and disconnect all interconnecting cables including the mains adapter.
2) Remove the BATTERY PACK as described earlier in this section.
3) Should they be installed, remove any PCMCIA cards and/or the MEMORY CARD as described earlier in this section.
4) Follow all instructions as detailed under the disassembly procedures**Hard Disk Drive, Back Cover, Upper System Board, Backup Battery and RTC Battery, FL Inverter, Lower System Board - T200** and **Tablet - T200** before proceeding.
5) If present, remove any tape securing the FLUORESCENT LAMP CABLE into the system unit (FIGURE FIFTEEN).
6) Carefully lift the FLUORESCENT LAMP UNIT out of the system unit noting how it is located on the plastic lug (circled) at its top right hand corner (FIGURE FIFTEEN).
7) Remove the three screws (M2x4mm) securing the GROUNDING WIRES to the display module and carefully lift the display module out of the system unit (FIGURE FIFTEEN).
8) Refit the display module and FLUORESCENT LAMP UNIT in reverse order ensuring that the GROUNDING WIRES to the display module are correctly attached.

Lower System Board - T200CS

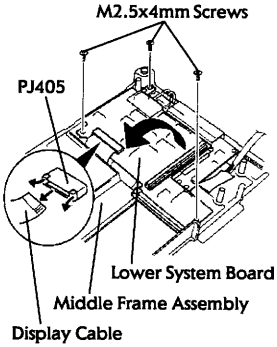

FIGURE SIXTEEN

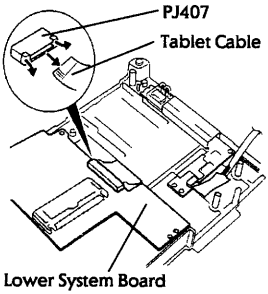

FIGURE SEVENTEEN

1) Switch the T200CS off and disconnect all interconnecting cables including the mains adapter.
2) Remove the BATTERY PACK as described earlier in this section.
3) Should they be installed, remove any PCMCIA cards and/or the MEMORY CARD as described earlier in this section.
4) Follow all instructions as detailed under the disassembly procedures **Hard Disk Drive, Back Cover** and **Upper System Board, Backup Battery and RTC Battery** before proceeding.
5) Carefully release the locking pegs on ZIF connector PJ405 and carefully withdraw the DISPLAY CABLE from within it (FIGURE SIXTEEN).

Note:- Should PJ405 by shielded by a black plastic cover it will be necessary to properly expose it by carefully working the front edge of the plastic free from underneath the MIDDLE FRAME ASSEMBLY. Do not under any circumstances unstick the black plastic cover from the LOWER SYSTEM BOARD.

6) Remove the three screws (M2.5x4mm) securing the LOWER SYSTEM BOARD and carefully pivot it over to fully expose connector PJ407 on its underneath (FIGURE SIXTEEN).
7) Carefully release the locking pegs on ZIF connector PJ407 and withdraw the TABLET CABLE from within it (FIGURE SEVENTEEN).
8) Lift the LOWER SYSTEM BOARD out of the system unit.
9) Refit the LOWER SYSTEM BOARD in reverse order ensuring that the black plastic sheet on its top edge is correctly folded underneath the MIDDLE FRAME ASSEMBLY.

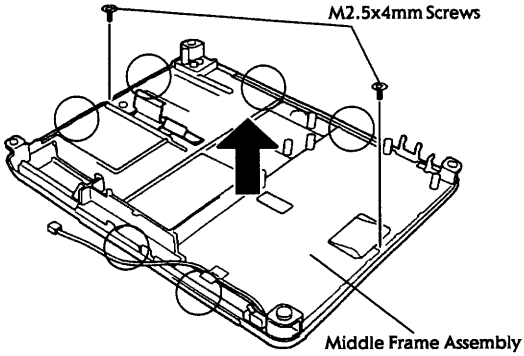

FIGURE EIGHTEEN

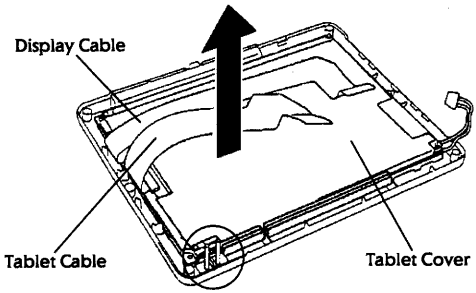

FIGURE NINETEEN

1) Switch the T200CS off and disconnect all interconnecting cables including the mains adapter.
2) Remove the BATTERY PACK as described earlier in this section.
3) Should they be installed, remove any PCMCIA cards and/or the MEMORY CARD as described earlier in this section.
4) Follow all instructions as detailed under the disassembly procedures**Hard Disk Drive, Back Cover, Upper System Board, Backup Battery and RTC Battery, FL Inverter** and **Lower System Board - T200CS** before proceeding.
5) Remove the two screws (M2.5x4mm) securing the MIDDLE FRAME ASSEMBLY (FIGURE EIGHTEEN).
6) Carefully release the six latches (circled) securing the MIDDLE FRAME ASSEMBLY and lift it out of the system unit (FIGURE EIGHTEEN).

Note:- During this procedure the metal posts located at each corner of the MIDDLE FRAME ASSEMBLY may slide out of their locating holes. If this occurs then these posts must be replaced during the reassembly process.

/continued/

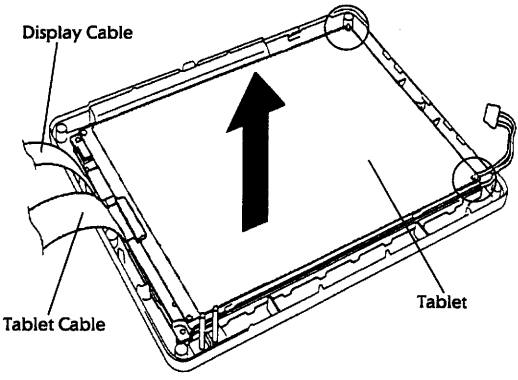

FIGURE TWENTY

7) If present, remove any tape securing either the TABLET CABLE and/ or the DISPLAY CABLE to the TABLET COVER (FIGURE NINETEEN overleaf).
8) If present, remove any tape securing the TABLET COVER to the TABLET itself.
9) Lift the TABLET COVER out of the system unit ensuring that the clear plastic light conductors (circled) do not become damaged (FIGURE NINETEEN overleaf).
10) Carefully lift the TABLET out of the system unit noting how it is located on the two plastic lugs (circled) at its corners (FIGURE TWENTY).

Note:- The TABLET itself is extremely fragile and should not be subjected to any adverse bends or twists.

11) Refit the TABLET in reverse order ensuring that the following points are observed:-

a) The TABLET is located correctly on the two plastic lugs at its corners.
b) Both the TABLET COVER and MIDDLE FRAME ASSEMBLY are replaced carefully to avoid damage to the clear plastic light conductors.
c) Any metal posts that slid out from the corners of the MIDDLE FRAME ASSEMBLY are replaced.
d) The FLUORESCENT LAMP CABLE is fed through the rectangular recess at the rear left hand corner of the MIDDLE FRAME ASSEMBLY when the latter is replaced.
e) The TABLET CABLE and DISPLAY CABLE are fed through the rectengular hole at the left hand side of the MIDDLE FRAME ASSEMBLY when the latter is replaced.

Fluorescent Lamp Unit and Display Module - T200CS

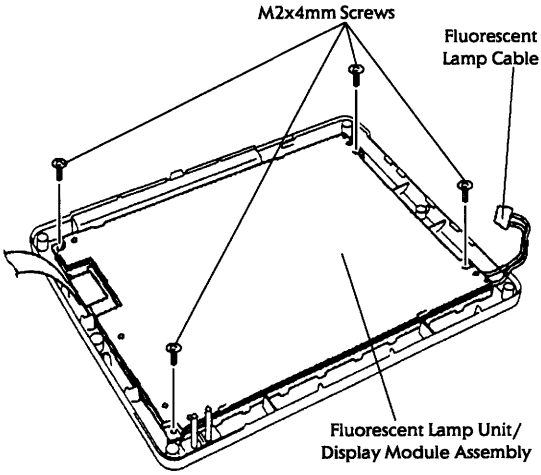

FIGURE TWENTY ONE

1) Switch the T200CS off and disconnect all interconnecting cables including the mains adapter.
2) Remove the BATTERY PACK as described earlier in this section.
3) Should they be installed, remove any PCMCIA cards and/or the MEMORY CARD as described earlier in this section.
4) Follow all instructions as detailed under the disassembly procedures**Hard Disk Drive, Back Cover, Upper System Board, Backup Battery and RTC Battery, FL Inverter, Lower System Board - T200CS** and **Tablet - T200CS** before proceeding.
5) If present, remove any tape securing the FLUORESCENT LAMP CABLE into the system unit (FIGURE TWENTY ONE).
6) Remove the four screws (M2x4mm) securing the FLUORESCENT LAMP UNIT (FIGURE TWENTY ONE).
7) Carefully lift the FLUORESCENT LAMP UNIT/DISPLAY MODULE ASSEMBLY out of the system unit (FIGURE TWENTY ONE).
8) At this point, and if required, the display module can be carefully separated from the fluorescent lamp unit.
9) Refit the display module and fluorescent lamp unit in reverse order.

Stylus Nib

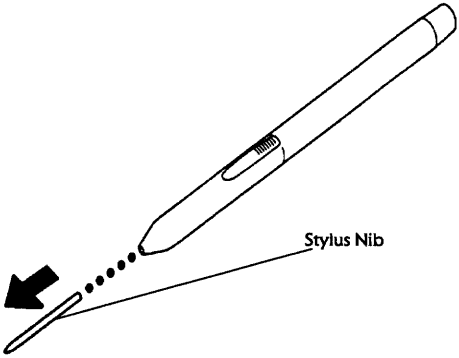

FIGURE TWENTY TWO

1) Carefully pull out the STYLUS NIB using a pair of tweezers or a small pair of pliers (FIGURE TWENTY ONE).
2) Install a new STYLUS NIB ensuring that it is pushed fully into the pen body.

Real Mode Memory Map

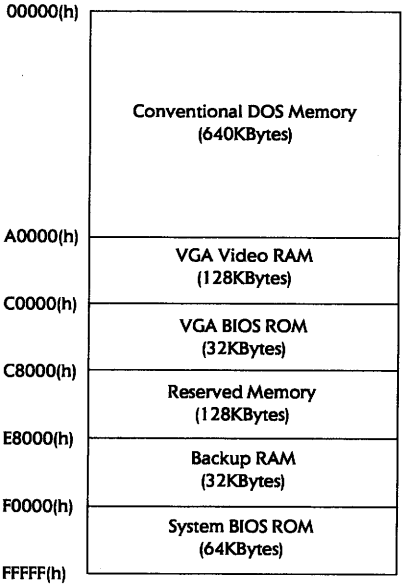

Interrupt Assignments

Interrupt Controller	Interrupt Level	Interrupt Assignment
-	NMI	RAM Parity Error, I/O Channel Error
1	0	Timer
	1	Keyboard (External)
	2	Interrupt Controller for Levels 8 to 15
	3	COM2:
	4	COM1:
	5	COM3: (Tablet)
	6	Floppy Diskette Controller
	7	Printer (LPT1:)
2	8	Real Time Clock
	9	Software Redirect to INT 0A(h)
	10	Reserved
	11	Reserved
	12	PS/2 Mouse
	13	Math Co-Processor
	14	Hard Disk Controller
	15	Reserved

Direct Memory Access Assignments

DMA Controller	Channel Number	DMA Assignment
1	0	Not Used
	1	Reserved
	2	Floppy Diskette Drive
	3	Reserved
2	4	Cascade for DMA Controller One
	5	Reserved
	6	Reserved
	7	Not Used

Input/Output Port Assignments

I/O Port Address	Device/Function
000(h) to 01F(h)	82C37 - DMA Controller One
020(h) to 03F(h)	82C59 - Programmable Interrupt Controller One
040(h) to 05F(h)	82C54 - Timer
060(h) to 06F(h)	Keyboard Controller
070(h)	NMI Mask Register
070(h) to 07F(h)	Real Time Clock
080(h) to 09F(h)	DMA Page Register
0A0(h) to 0BF(h)	82C59 - Programmable Interrupt Controller Two
0C0(h) to 0DF(h)	82C37 - DMA Controller Two
0E0(h) to 0EF(h)	Special Register
0F0(h) to 0F7(h)	Math Co-Processor
100(h) to 1EF(h)	VGA
1F0(h) to 1FF(h)	Hard Disk Controller
200(h) to 207(h)	Game Controller
208(h) to 20F(h)	Not Used
210(h) to 217(h)	Expansion Unit
218(h) to 21F(h)	Not Used
220(h) to 227(h)	COM3: (Tablet)
228(h) to 277(h)	Not Used
278(h) to 27F(h)	Printer (LPT2:)
280(h) to 2A7(h)	Not Used
2A8(h) to 2AF(h)	Reserved for EMS Memory
2B0(h) to 2BF(h)	Not Used
2B8(h) to 2BF(h)	Reserved for EMS Memory
2C0(h) to 2EF(h)	Not Used
2E8(h) to 2EF(h)	Reserved for EMS Memory
2F0(h) to 2F7(h)	Not Used
2F8(h) to 2FF(h)	COM2:
300(h) to 31F(h)	Prototype Card
320(h) to 32F(h)	Hard Disk Controller (XT Type)
330(h) to 337(h)	Not Used
338(h) to 33F(h)	COM3:
340(h) to 377(h)	Not Used
378(h) to 37F(h)	Printer (LPT1:)

/continued/

I/O Port Address	Device/Function
380(h) to 38F(h)	2nd Bisynchronous Communications Port
390(h) to 39F(h)	Not Used
3A0(h) to 3AF(h)	1st Bisynchronous Communications Port
3B0(h) to 3BF(h)	Monochrome Display Adapter / Printer (LPT3:)
3C0(h) to 3DF(h)	CGA, EGA and VGA
3E0(h) to 3E7(h)	Not Used
3E8(h) to 3EF(h)	COM3:
3F0(h) to 3F7(h)	Floppy Diskette Controller
3F8(h) to 3FF(h)	COM1:
400(h) to 47F(h)	Not Used
480(h) to 49F(h)	DMA High Page Register

T1800

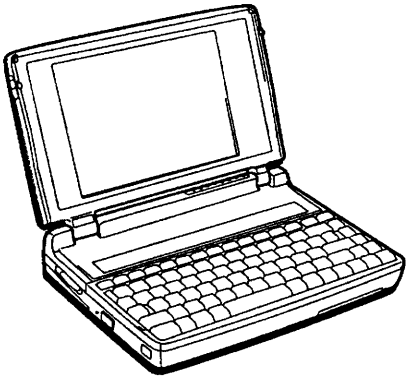

T1800 Notebook

Section Index

Product Specifications 46
Mains Adapter and Battery Specifications 46
Product Features 46
Battery Release Procedure 47
Upgrade Procedures 48
  Memory Expansion Cards 48
  i80387SX Math Co-Processor 49
  Internal D-Slot Modem 50
Setup Screen Layout 52
FN-Popup Window Layout 52
Disassembly Procedures 53
  Keyboard 53
  Modem Cradle 53
  Top Cover 54
  Hard Disk Drive 56
  Floppy Diskette Drive and RTC Battery 57
  Battery Terminals and Power Supply Board 58
  System Board 59
  Display Mask 60
  FL Inverter 61
  Display Module 62
  LED Board and Backup Battery 63
Real Mode Memory Map 64
Interrupt Assignments 65
Direct Memory Access Assignments 65
Input/Output Port Assignments 66

T1800 Notebook

Product Specifications

	T1800
Processor	i80386SX
Clock Speed	20MHz
Standard Memory	2MBytes
Maximum Memory	10MBytes
Hard Disk Drive	40/60Mb
Floppy Diskette Drive	1.44MBytes
Display Type	STN Mono
Display Resolution	VGA
Display Colour Palette	64 Grey Scales
Internal Modem Slot	Yes
Serial Port	Yes
Parallel Port	Yes
Monitor Port	Yes
PS/2 Mouse Port	Yes
PS/2 Keyboard Port	No
Keyboard Type	84-Keys
DeskStation Expansion	None
Maximum Battery Life	5 Hours
Weight (kg/lb)	3.1/6.8

Mains Adapter and Battery Specifications

Mains Adapter
Toshiba Part Number PA2411U
Output Rating 15 volts, 2.0 amps

Battery Pack
Toshiba Part Number PA2410U
Power Rating
2,800mA/hour, 9.6 volts DC

Product Features

* Processor Reset Button
* Resume Mode Provision
* Hard-RAM Provision
* Max-Time Power Management
* Advanced Power Management
* Kensington Cable Lock
* Password Security
* NiCd Battery
* Flash BIOS Firmware

Please refer to the Appendices at the back of this booklet for a description of some of the features described above

Battery Release Procedure

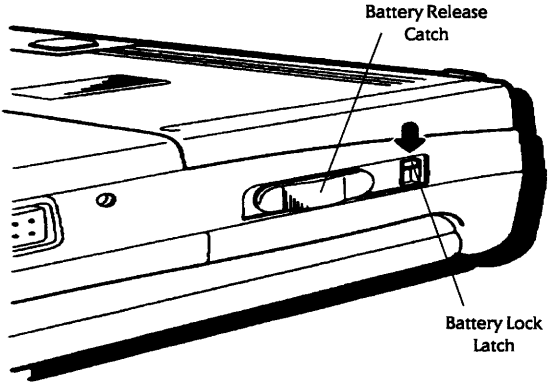

FIGURE ONE

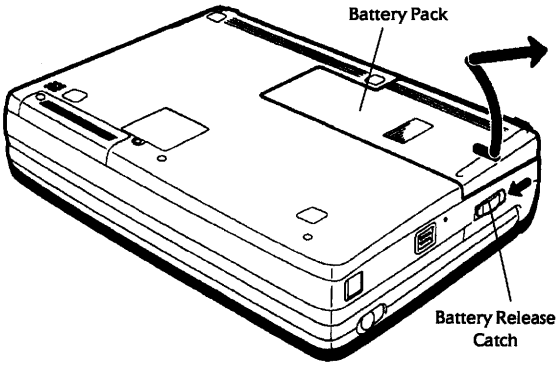

FIGURE TWO

1) Switch the T1800 off and disconnect all interconnecting cables including the mains adapter.
2) Turn the T1800 upside down and place it on a flat surface.
3) Slide the BATTERY LOCK LATCH into its unlocked position (FIGURE ONE).
4) Slide the BATTERY RELEASE CATCH towards the front of the system and hold it in place (FIGURE TWO).
5) Slide the BATTERY PACK towards the side of the T1800, lift, and then remove it from the system (FIGURE TWO).
6) Refit the BATTERY PACK in reverse order ensuring that it is seated correctly and that the BATTERY LOCK LATCH is moved back to its locked position.

Memory Expansion Cards

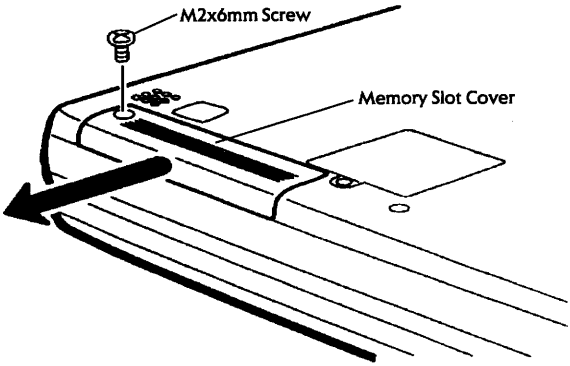

FIGURE ONE

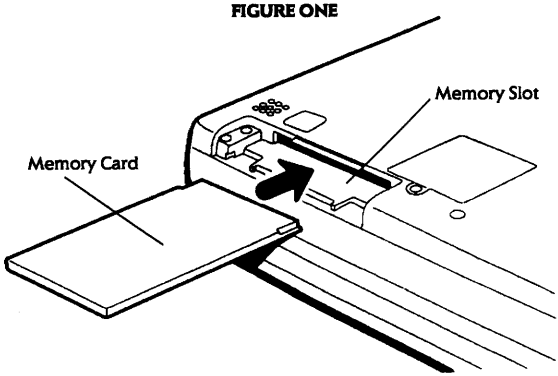

FIGURE TWO

1) Ensure the T1800 is configured to start in Boot Mode.
2) Switch the T1800 off and disconnect all interconnecting cables including the mains adapter.
3) Turn the T1800 upside down and place it on a flat surface.
4) Remove the screw (M2x6mm) securing the MEMORY SLOT COVER and slide the cover off (FIGURE ONE).
5) Insert the MEMORY CARD into the MEMORY SLOT ensuring that it is oriented correctly - remember the T1800 is now inverted (FIGURE TWO).
6) Replace and secure the MEMORY SLOT COVER.
7) Turn on the T1800. The system will automatically recognise the additional memory during the boot sequence.

CAUTION **Do not touch the connecting edge of the memory card as debris, oil or grease in or on this connector may cause memory access problems.**

i80387SX Math Co-Processor

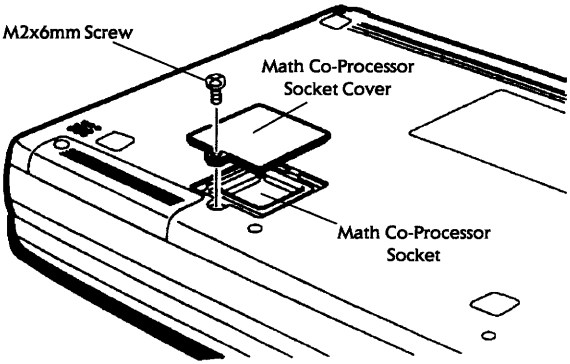

FIGURE ONE

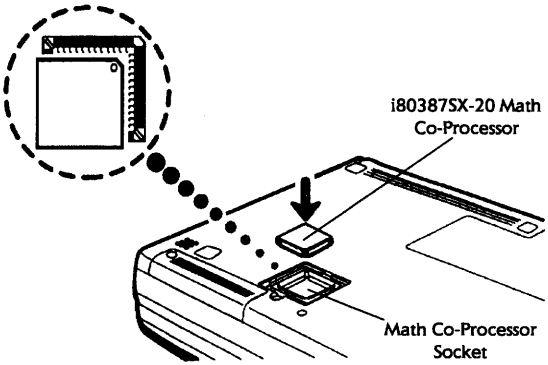

FIGURE TWO

1) Ensure the T1800 is configured to start in Boot Mode.
2) Switch the T1800 off and disconnect all interconnecting cables including the mains adapter.
3) Turn the T1800 upside down and place it on a flat surface.
4) Remove the screw (M2x6mm) securing the MATH CO-PROCESSOR SOCKET COVER and remove the cover (FIGURE ONE).
5) Insert the i80387SX-20 MATH CO-PROCESSOR into the MATH CO-PROCESSOR SOCKET ensuring that it is oriented correctly (FIGURE TWO).
6) Replace and secure the MATH CO-PROCESSOR SOCKET COVER.
7) Turn on the T1800. The system will automatically recognise the presence of the math co-processor as part of the boot sequence.

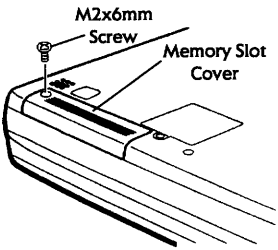

FIGURE ONE

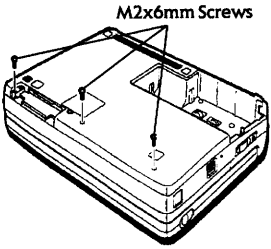

FIGURE TWO

FIGURE THREE

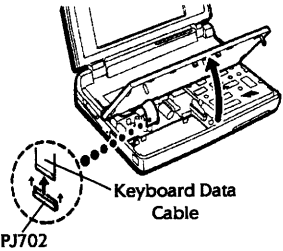

FIGURE FOUR

1) Ensure the T1800 is configured to start in Boot Mode.
2) Switch the T1800 off and disconnect all interconnecting cables including the mains adapter.
3) Turn the T1800 upside down and place it on a flat surface.
4) Remove the screw (M2x6mm) securing the MEMORY SLOT COVER and slide the cover off (FIGURE ONE).
5) Remove the three silver screws (M2x6mm) from the front edge (FIGURE TWO).
6) Turn the T1800 the right way up and open the screen.
7) Remove the keyboard by releasing the two latches inside the mask frame immediately in front of the space bar. To do this place your thumbs along the front edge of the mask frame, your forefingers in between the space bar and the mask frame and then push and rotate as indicated (FIGURE THREE).
8) Lean the keyboard back against the display panel.
9) Open the ZIF socket at PJ702, release the KEYBOARD DATA CABLE and remove the keyboard (FIGURE FOUR).

/continued/

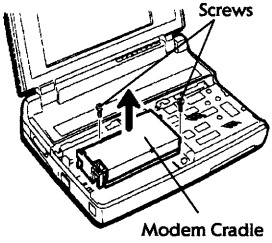

FIGURE FIVE

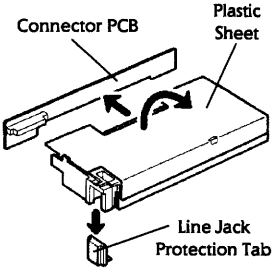

FIGURE SIX

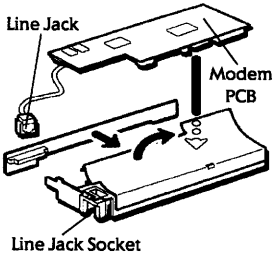

FIGURE SEVEN

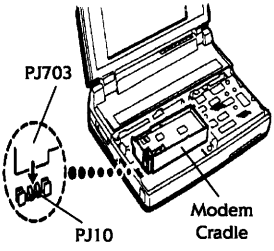

FIGURE EIGHT

10) Remove the two silver screws (M2.5x6mm) from the MODEM CRADLE (FIGURE FIVE).
11) Remove the MODEM CRADLE taking care to also remove the attached CONNECTOR PCB from PJ10 on the T1800's system board (FIGURE FIVE).
12) Remove the CONNECTOR PCB and the LINE JACK PROTECTION TAB from the MODEM CRADLE (FIGURE SIX).
13) If one is fitted, lift up the PLASTIC SHEET which covers the MODEM CRADLE (FIGURE SIX).
14) Place the MODEM PCB into the MODEM CRADLE, underneath of the PLASTIC SHEET, ensuring that it snaps into position. (FIGURE SEVEN).
15) Fit the CONNECTOR PCB onto the plug on the MODEM PCB, ensuring that the CONNECTOR PCB is clipped back onto the MODEM CRADLE (FIGURE SEVEN).
16) Fit the LINE JACK into the LINE JACK SOCKET on the MODEM CRADLE (FIGURE SEVEN).
17) Replace the MODEM CRADLE into the T1800 ensuring that PJ703 on the modem's CONNECTOR PCB securely connects to PJ10 on the computer's system board (FIGURE EIGHT).
18) Refit the keyboard and replace the MEMORY SLOT COVER by reversing the above procedures.
19) Turn on the T1800. The system will automatically recognise the presence of the modem as part of the boot sequence.

Setup Screen Layout

T1800 SETUP

MEMORY		COM/PRT/FDD	
Total	= 2048KB	Serial Port	= COM1 (IRQ4/3F8H)
Base	= 640KB	Built-in Modem	= COM2 (IRQ3/2F8H)
Extended	= 1280KB	Built-in Modem Power	= On
Hard RAM	= 0KB	External FDD/PRT	= Printer
Shadow BIOS ROM	= Enable (128KB)	Printer Port Type	= Output
DISPLAY		**POWER ON PASSWORD**	
Display Adaptor	= VGA Compatible	Not Registered	
LCD Display Mode	= Color		
LCD Gray Scale Level	= Normal 64 Levels	**OTHERS**	
		Resume Mode	= Boot
HARD DISK		Battery Save Mode	= Automatic (Long Life)
Capacity = 40MB		Popup	= Enable
TIME & DATE		Speaker	= On
00:00:00, Tue Jan 1, 1992		Battery Alarm	= On

↑↓←→: Select items, Space, BkSp : Change values
Esc: Exit without saving, Home: Set default values, End: Save and reboot

Note:- In addition to this basic setup screen information, there are a number of pre-configured settings associated with the **Battery Save Mode** option. When selected, these settings affect the way the T1800 manages its battery usage as follows:-

Automatic (Normal Life)		Automatic (Long Life)	
Processing Speed	= High	Processing Speed	= Low
CPU Sleep Mode	= Disable	CPU Sleep Mode	= Enable
HDD Auto Off	= Disable	HDD Auto Off	= 03Min.
Display Auto Off	= Disable	Display Auto Off	= 03Min.

FN-Popup Window Layout

The T1800 FN-Popup user status and configuration window allows the following information to be viewed and/or changed:-

Page One	Page Two
Remaining Battery Capacity: E■■■■■■F LCD Gray Scale Level: Normal 64 Levels	Built-in Modem Power: On Off*
Mode: Resume Boot Battery Save: Automatic (Long Life)	Speaker: On Off Battery Alarm: On Off

* The **Built-in Modem Power** option is only displayed when an internal modem is installed into the system.

Keyboard

1) Switch the T1800 off and disconnect all interconnecting cables including the mains adapter.
2) Remove the BATTERY PACK as described earlier in this section.
3) Should one be installed, remove the MEMORY CARD as described earlier in this section.
4) Follow all instructions up to and including step (9) as detailed under the procedure **Internal D-Slot Modem Upgrade** earlier in this section.
5) Refit the keyboard by reversing the instructions described in steps (1) through (9) under the procedure **Internal D-Slot Modem Upgrade** earlier in this section.

Modem Cradle

1) Switch the T1800 off and disconnect all interconnecting cables including the mains adapter.
2) Remove the BATTERY PACK as described earlier in this section.
3) Should one be installed, remove the MEMORY CARD as described earlier in this section.
4) Follow all instructions up to and including step (12) as detailed under the procedure **Internal D-Slot Modem Upgrade** earlier in this section.
5) Refit the MODEM CRADLE by reversing the instructions described in steps (1) through (12) under the procedure **Internal D-Slot Modem Upgrade** earlier in this section.

Top Cover

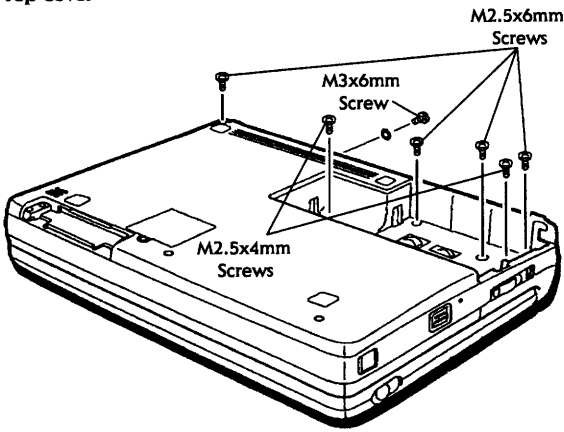

FIGURE ONE

1) Switch the T1800 off and disconnect all interconnecting cables including the mains adapter.
2) Remove the BATTERY PACK as described earlier in this section.
3) Should one be installed, remove the MEMORY CARD as described earlier in this section.
4) Turn the T1800 around so that its rear panel is towards you.
5) Remove the earthing screw (M3x6mm) located immediately above the VGA output port (FIGURE ONE).
4) Turn the T1800 upside down and place it on a flat surface.
5) Remove the six screws (M2.5x6mm and M2.5x4mm) located within the battery compartment and at the rear corner of the system (FIGURE ONE).
6) Follow all instructions as detailed under the disassembly procedure **Keyboard** before proceeding.

/continued/

Top Cover (continued)

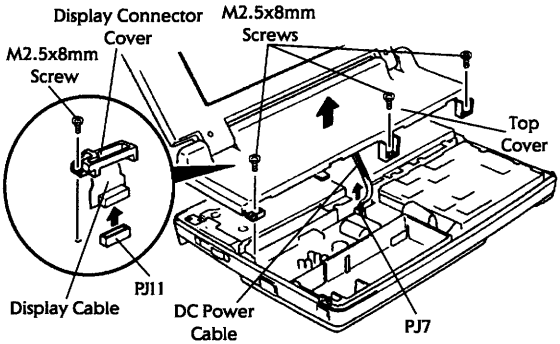

FIGURE TWO

7) Unplug the DC POWER CABLE from PJ7 (FIGURE TWO).
8) Remove the three screws (M2.5x8mm) securing the TOP COVER ensuing that, when the third screw is removed, the TOP COVER is adequately supported to prevent it from pivoting backwards onto the desk (FIGURE TWO).
9) Note the orientation of the sliding flap covering the ports at the rear of the system, lift the TOP COVER and pivot it backwards to rest on the desk behind the system unit. You will not be able to fully remove the TOP COVER at this stage as it is still attached to the system board via the DISPLAY CABLE.

   Note:- When the TOP COVER is removed from the system the sliding flap covering the ports at the rear of the system will fall off and will need to be set aside.

10) Remove the screw (M2.5x8mm) securing the DISPLAY CONNECTOR COVER and remove it from the system (FIGURE TWO).
11) Unplug the DISPLAY CABLE from PJ11 and place the TOP COVER aside (FIGURE TWO).
12) Refit the TOP COVER in reverse order taking care to ensure that the sliding flap, which covers the ports, is oriented correctly.

Hard Disk Drive

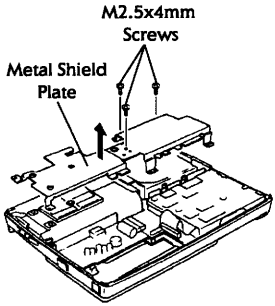

FIGURE THREE

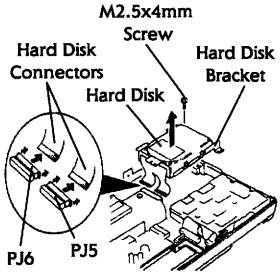

FIGURE FOUR

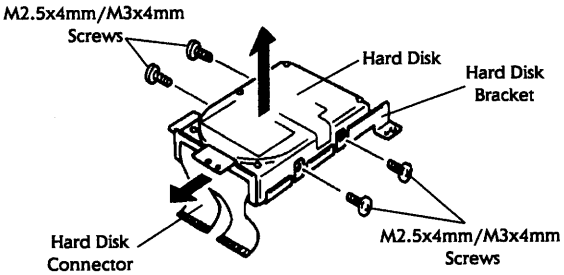

FIGURE FIVE

1) Switch the T1800 off and disconnect all interconnecting cables including the mains adapter.
2) Remove the BATTERY PACK as described earlier in this section.
3) Should one be installed, remove the MEMORY CARD as described earlier in this section.
4) Follow all instructions as detailed under the disassembly procedures **Keyboard** and **Top Cover** before proceeding.
5) Remove the three screws (M2.5x4mm) securing the METAL SHIELD PLATE and lift it out of the system (FIGURE THREE).
6) Remove the screw (M2.5x4mm) securing the HARD DISK BRACKET into the system unit and lift out the HARD DISK/HARD DISK BRACKET assembly to expose the ZIF connectors PJ5 and PJ6 (FIGURE FOUR).
7) Release the locking pegs on ZIF sockets PJ5 and PJ6, carefully withdraw the HARD DISK CONNECTORS from them and remove the HARD DISK from the system (FIGURE FOUR).
8) Disconnect the HARD DISK CONNECTOR by prising it away from the HARD DISK (FIGURE FIVE).
9) Depending on the size/model of HARD DISK installed in the system, remove the four screws (either M2.5x4mm or M3x4mm) securing the HARD DISK BRACKET to the HARD DISK and remove the HARD DISK from it (FIGURE FIVE).
10) Refit the HARD DISK in reverse order.

Floppy Diskette Drive and RTC Battery

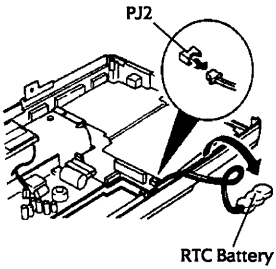

FIGURE SIX

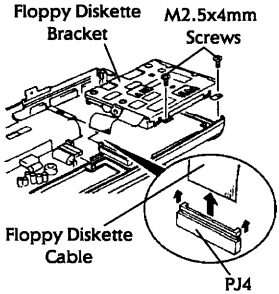

FIGURE SEVEN

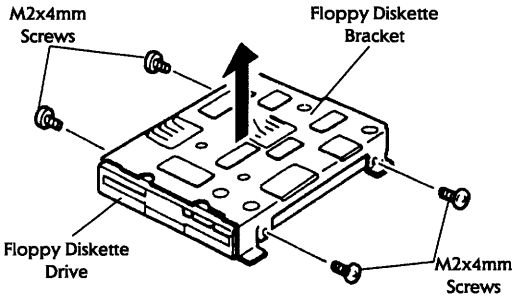

FIGURE EIGHT

1) Switch the T1800 off and disconnect all interconnecting cables including the mains adapter.
2) Remove the BATTERY PACK as described earlier in this section.
3) Should one be installed, remove the MEMORY CARD as described earlier in this section.
4) Follow all instructions as detailed under the disassembly procedures **Keyboard, Top Cover** and **Hard Disk Drive** before proceeding.
5) If present, peel back the tape securing the RTC BATTERY to the front of the FLOPPY DISKETTE BRACKET.
6) Unplug the RTC BATTERY from PJ2 and remove it from the system (FIGURE SIX).
7) Remove the two screws (M2.5x4mm) securing the FLOPPY DISKETTE BRACKET into the system unit and lift out the FLOPPY DISKETTE DRIVE/FLOPPY DISKETTE BRACKET assembly to fully expose the ZIF connector PJ4 (FIGURE SEVEN).
8) Release the locking pegs on ZIF socket PJ4, carefully withdraw the FLOPPY DISKETTE CABLE from it and remove the FLOPPY DISKETTE DRIVE from the system (FIGURE SEVEN).
9) Remove the four screws (M2x4mm) securing the FLOPPY DISKETTE BRACKET to the FLOPPY DISKETTE DRIVE and remove the FLOPPY DISKETTE DRIVE from it (FIGURE EIGHT).
10) Refit the FLOPPY DISKETTE DRIVE and RTC BATTERY in reverse order.

Battery Terminals and Power Supply Board

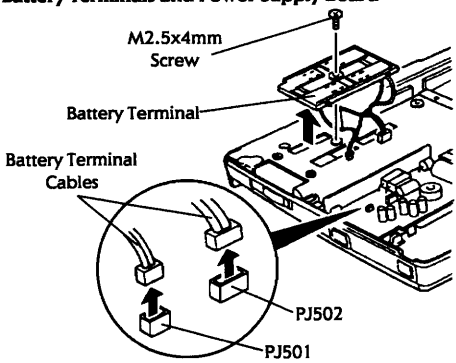

FIGURE NINE

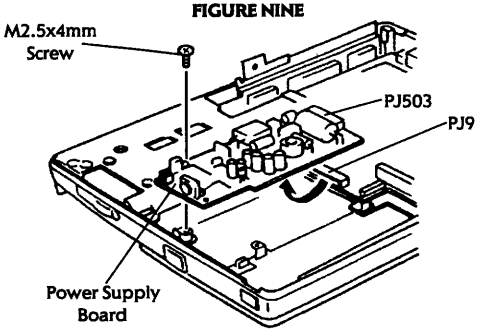

FIGURE TEN

1) Switch the T1800 off and disconnect all interconnecting cables including the mains adapter.
2) Remove the BATTERY PACK as described earlier in this section.
3) Should one be installed, remove the MEMORY CARD as described earlier in this section.
4) Follow all instructions as detailed under the disassembly procedures **Keyboard, Modem Cradle, Top Cover** and **Hard Disk Drive (to step (5) only)** before proceeding.
5) If present, peel back any tape securing the BATTERY TERMINAL to the system unit.
6) Unplug the BATTERY TERMINAL CABLES from PJ501 and PJ502 on the POWER SUPPLY BOARD (FIGURE NINE).
7) Remove the screw (M2.5x4mm) securing the BATTERY TERMINAL to the system unit and remove it (FIGURE NINE).
8) Remove the screw (M2.5x4mm) securing the POWER SUPPLY BOARD to the system unit (FIGURE TEN).
9) Lift the POWER SUPPLY BOARD at its left hand side and disconnect its PJ503 connector from PJ9 on the system board (FIGURE TEN).
10) Refit the POWER SUPPLY BOARD and BATTERY TERMINAL in reverse order.

System Board

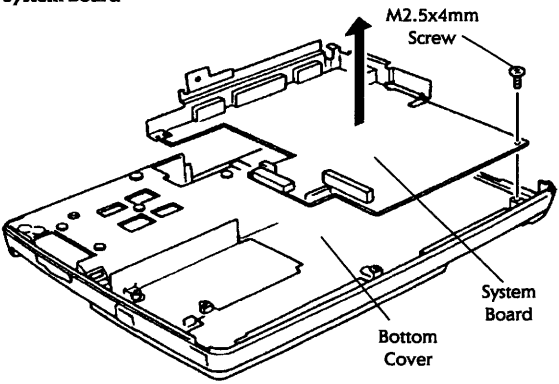

FIGURE ELEVEN

1) Switch the T1800 off and disconnect all interconnecting cables including the mains adapter.
2) Remove the BATTERY PACK as described earlier in this section.
3) Should one be installed, remove the MEMORY CARD as described earlier in this section.
4) Follow all instructions as detailed under the disassembly procedures **Keyboard, Modem Cradle, Top Cover, Hard Disk Drive, Floppy Diskette Drive and RTC Battery** and **Battery Terminals and Power Supply Board** before proceeding.
5) Remove the rubber plug from the Kensington Cable Lock slot located on the right hand side of the system unit, immediately in front of the PS/2 mouse port.
6) Remove the screw (M2.5x4mm) securing the SYSTEM BOARD and lift the SYSTEM BOARD away from the BOTTOM COVER (FIGURE ELEVEN).
10) Refit the SYSTEM BOARD in reverse order.

Display Mask

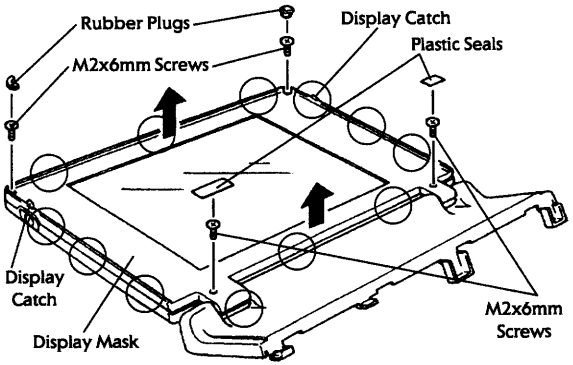

FIGURE TWELVE

1) Switch the T1800 off and disconnect all interconnecting cables including the mains adapter.
2) Remove the BATTERY PACK as described earlier in this section.
3) Should one be installed, remove the MEMORY CARD as described earlier in this section.
4) Remove the two RUBBER PLUGS from the top left and top right of the DISPLAY MASK and remove the two screws (M2x6mm) hidden underneath them (FIGURE TWELVE).
5) Remove the two PLASTIC SEALS from the left and right hinge arms of the DISPLAY MASK and remove the two screws (M2x6mm) hidden underneath them (FIGURE TWELVE).
6) Starting with the top three, carefully release the twelve latches (circled) securing the DISPLAY MASK to the TOP COVER and remove it ensuring that neither DISPLAY CATCH, which hold the clamshell together when the T1800 is closed, obstructs the DISPLAY MASK and damages it (FIGURE TWELVE).
7) Refit the DISPLAY MASK in reverse order.

FL Inverter

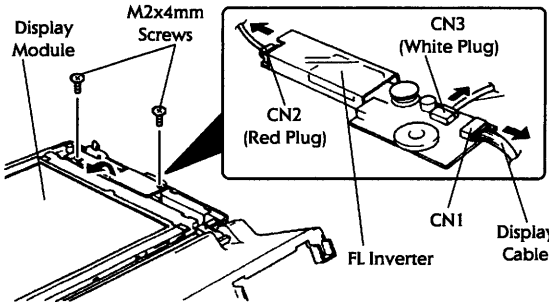

FIGURE THIRTEEN

1) Switch the T1800 off and disconnect all interconnecting cables including the mains adapter.
2) Remove the BATTERY PACK as described earlier in this section.
3) Should one be installed, remove the MEMORY CARD as described earlier in this section.
4) Follow all instructions as detailed under the disassembly procedure **Display Mask** before proceeding.
5) Remove the two screws (M2x4mm) securing the FL INVERTER and pivot it towards the DISPLAY MODULE taking care not to catch the contrast wheel (FIGURE THIRTEEN).
6) Disconnect the DISPLAY CABLE from CN1 (FIGURE THIRTEEN).
7) Disconnect the FL INVERTER cables from CN2 (RED PLUG) and CN3 (WHITE PLUG) and remove the FL INVERTER (FIGURE THIRTEEN).
8) Refit the FL INVERTER in reverse order.

Display Module

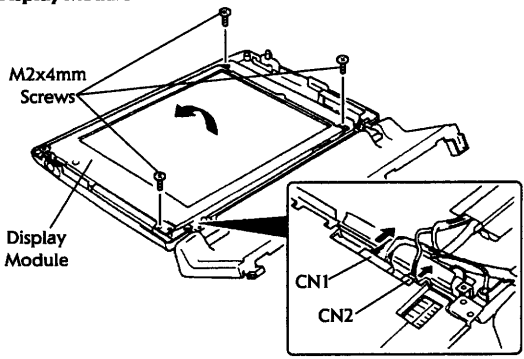

FIGURE FOURTEEN

1) Switch the T1800 off and disconnect all interconnecting cables including the mains adapter.
2) Remove the BATTERY PACK as described earlier in this section.
3) Should one be installed, remove the MEMORY CARD as described earlier in this section.
4) Follow all instructions as detailed under the disassembly procedures **Display Mask** and **FL Inverter** before proceeding.
5) Remove the three screws (M2x4mm) securing the DISPLAY MODULE, noting that one screw also secures a grounding wire at the display's bottom left hand corner, and carefully pivot it over to lie on the left hand side of the TOP COVER (FIGURE FOURTEEN).
6) Disconnect the cables from CN1 and CN2 and remove the DISPLAY MODULE from the system unit (FIGURE FOURTEEN).
7) Refit the DISPLAY MODULE in reverse order.

LED Board and Backup Battery

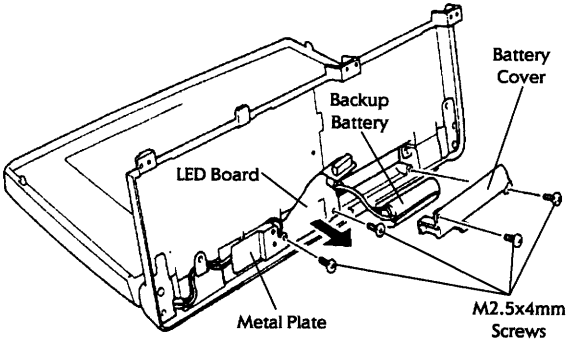

FIGURE FIFTEEN

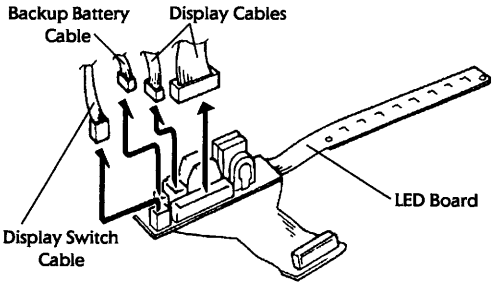

FIGURE SIXTEEN

1) Switch the T1800 off and disconnect all interconnecting cables including the mains adapter.
2) Remove the BATTERY PACK as described earlier in this section.
3) Should one be installed, remove the MEMORY CARD as described earlier in this section.
4) Follow all instructions as detailed under the disassembly procedures **Keyboard** and **Top Cover** before proceeding.
5) Orient the TOP COVER so that you are looking at its underside (FIGURE FIFTEEN).
6) Remove the two screws (M2.5x4) securing the BATTERY COVER and remove it (FIGURE FIFTEEN).
7) Remove the screw (M2.5x4mm) securing the METAL PLATE and remove it from the TOP COVER (FIGURE FIFTEEN).
8) Remove the remaining screw (M2.5x4mm) securing a grounding wire and the LED BOARD then lift it and the BACKUP BATTERY partially out of the TOP COVER (FIGURE FIFTEEN).
9) Disconnect the BACKUP BATTERY CABLE, DISPLAY SWITCH CABLE and the two DISPLAY CABLES from the LED BOARD and remove it (FIGURE SIXTEEN).
10) Refit the LED BOARD and BACKUP BATTERY in reverse order.

Real Mode Memory Map

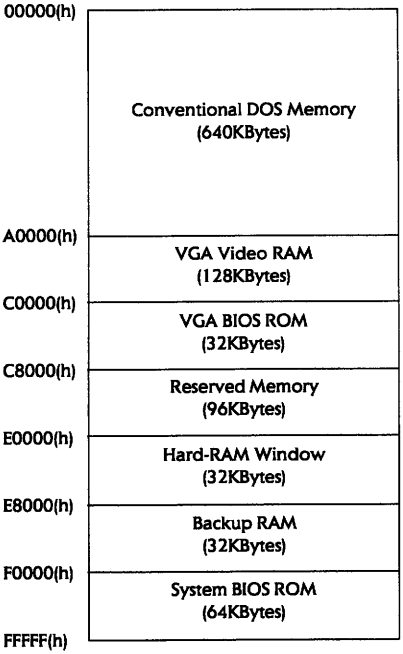

Interrupt Assignments

Interrupt Controller	Interrupt Level	Interrupt Assignment
-	NMI	RAM Parity Error, I/O Channel Error
1	0	Timer
	1	Keyboard
	2	Interrupt Controller for Levels 8 to 15
	3	COM2:
	4	COM1:
	5	Printer (LPT2:)
	6	Floppy Diskette Controller
	7	Printer (LPT1:)
2	8	Real Time Clock
	9	Software Redirect to INT 0A(h)
	10	Reserved
	11	Reserved
	12	PS/2 Mouse
	13	Math Co-Processor
	14	Hard Disk Controller
	15	Reserved

Direct Memory Access Assignments

DMA Controller	Channel Number	DMA Assignment
1	0	Not Used
	1	Reserved
	2	Floppy Diskette Drive
	3	Reserved
2	4	Cascade for DMA Controller One
	5	Reserved
	6	Reserved
	7	Not Used

Input/Output Port Assignments

I/O Port Address	Device/Function
000(h) to 01F(h)	8237 - DMA Controller One
020(h) to 03F(h)	8259 - Programmable Interrupt Controller One
040(h) to 05F(h)	8254 - Timer
060(h) to 06F(h)	Keyboard Controller
070(h) to 07F(h)	Real Time Clock
080(h) to 09F(h)	DMA Page Register
0A0(h) to 0BF(h)	8259 - Programmable Interrupt Controller Two
0C0(h) to 0DF(h)	8237 - DMA Controller Two
0E0(h) to 0EF(h)	Special Register
0F0(h) to 0FF(h)	Math Co-Processor Error Clear Port
100(h) to 1EF(h)	Not Used
1F0(h) to 1FF(h)	Hard Disk Controller
200(h) to 2F7(h)	Not Used
2F8(h) to 2FF(h)	COM2:
300(h) to 377(h)	Not Used
378(h) to 37F(h)	Printer (LPT1:)
380(h) to 3AF(h)	Not Used
3B0(h) to 3DF(h)	VGA
3E0(h) to 3EF(h)	Not Used
3F0(h) to 3F7(h)	Floppy Diskette Controller
3F8(h) to 3FF(h)	COM1:

T1850
Range

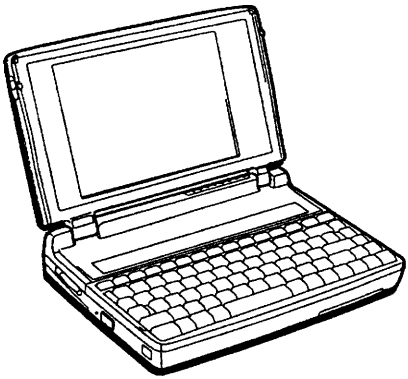

T1850 Notebook Range

Section Index

Product Specifications 68
Mains Adapter and Battery Specifications 68
Product Features 68
Battery Release Procedure 69
Upgrade Procedures 69
  Memory Expansion Cards 69
  i80387SX Math Co-Processor 69
  Internal D-Slot Modem 69
Setup Screen Layout 69
FN-Popup Window Layout 70
Disassembly Procedures 70
  Keyboard 70
  Modem Cradle 70
  Top Cover 70
  Hard Disk Drive 70
  Floppy Diskette Drive and RTC Battery 70
  Battery Terminals and Power Supply Board 70
  System Board 70
  Display Mask 71
  FL Inverter - T1850 71
  Display Module - T1850 71
  FL Inverter and Display Module - T1850C 72
  LED Board and Backup Battery 73
Real Mode Memory Map 73
Interrupt Assignments 73
Direct Memory Access Assignments 73
Input/Output Port Assignments 73

T1850 Notebook Range

Product Specifications

	T1850	T1850C
Processor	i80386SX	i80386SX
Clock Speed	25MHz	25MHz
Standard Memory	4MBytes	4MBytes
Maximum Memory	12MBytes	12MBytes
Hard Disk Drive	80/120Mb	80/120Mb
Floppy Diskette Drive	1.44MBytes	1.44MBytes
Display Type	STN Mono	STN Colour
Display Resolution	VGA	VGA
Display Colour Palette	64 Grey Scales	256 Colours
Internal Modem Slot	Yes	Yes
Serial Port	Yes	Yes
Parallel Port	Yes	Yes
Monitor Port	Yes	Yes
PS/2 Mouse Port	Yes	Yes
PS/2 Keyboard Port	No	No
Keyboard Type	84-Keys	84-Keys
DeskStation Expansion	None	None
Maximum Battery Life	5 Hours	3.5 Hours
Weight (kg/lb)	3.1/6.8	3.3/7.3

Mains Adapter and Battery Specifications

Mains Adapter
Toshiba Part Number PA2411U
Output Rating 15 volts, 2.0 amps

Battery Pack
Toshiba Part Number PA2410U
Power Rating
2,800mA/hour, 9.6 volts DC

Product Features

* Processor Reset Button
* Resume Mode Provision
* Hard-RAM Provision
* Max-Time Power Management
* Advanced Power Management
* Kensington Cable Lock
* Password Security
* NiCd Battery
* Flash BIOS Firmware

Please refer to the Appendices at the back of this booklet for a description of some of the features described above

Battery Release Procedure

The battery release procedure for the T1850 range is exactly the same as for the T1800. Please refer to the T1800 section for details on how to remove and install additional battery packs.

Upgrade Procedures

Memory Expansion Cards

The memory upgrade procedure for the T1850 range is exactly the same as for the T1800. Please refer to the T1800 section for details on how to install additional memory cards.

I80387SX Math Co-Processor

The math co-processor upgrade procedure for the T1850 range is exactly the same as for the T1800 with the exception that the T1850 requires an i80387SX running at 25MHz. Please refer to the T1800 section for details on how to install a math co-processor option.

Internal D-Slot Modem

The internal D-slot modem upgrade procedure for the T1850 range is exactly the same as for the T1800. Please refer to the T1800 section for details on how to install an internal D-slot modem option.

Setup Screen Layout

T1850/T1850C SETUP

MEMORY		COM/PRT/FDD	
Total	= 4096KB	Serial Port	= COM1 (IRQ4/3F8H)
Base	= 640KB	Built-in Modem	= COM2 (IRQ3/2F8H)
Extended	= 3328KB	Built-in Modem Power	= On
Hard RAM	= 0KB	External FDD/PRT	= Printer
Shadow BIOS ROM	= Enable (128KB)	Printer Port Type	= Output
DISPLAY		**POWER ON PASSWORD**	
Display Adaptor	= VGA Compatible	Not Registered	
LCD Display Mode	= Color		
LCD Gray Scale Level	= Normal 64 Levels	**OTHERS**	
		Resume Mode	= Boot
HARD DISK		Battery Save Mode	= Automatic (Long Life)
Capacity = 80MB			
		Popup	= Enable
TIME & DATE		Speaker	= On
00:00:00, Tue Jan 1, 1992		Battery Alarm	= On

↑↓←→: Select items, Space, BkSp : Change values
Esc: Exit without saving, Home: Set default values, End: Save and reboot

Note 1:- The option to change the **LCD Gray Scale Level** does not appear on the setup screen for the T1850C.

Note 2:- In addition to this basic setup screen information, there are a number of pre-configured settings associated with the **Battery Save Mode** option. When selected, these settings affect the way the T1850/T1850C manages its battery usage as follows:-

Automatic (Normal Life)		Automatic (Long Life)	
Processing Speed	= High	Processing Speed	= Low
CPU Sleep Mode	= Disable	CPU Sleep Mode	= Enable
HDD Auto Off	= Disable	HDD Auto Off	= 03Min.
Display Auto Off	= Disable	Display Auto Off	= 03Min.

FN-Popup Window Layout

The T1850/T1850C FN-Popup user status and configuration window allows the following information to be viewed and/or changed:-

Page One	Page Two
Remaining Battery Capacity: E▪▪▪▪▪▪▪F LCD Gray Scale Level: Normal 64 Levels*	Built-in Modem Power: On Off**
Mode: Resume Boot Battery Save: Automatic (Long Life)	Speaker: On Off Battery Alarm: On Off

* The **LCD Gray Scale Level** option does not appear on the FN-Popup window for the T1850C.

** The **Built-in Modem Power** option is only displayed when an internal modem is installed into the system.

Disassembly Procedures

Keyboard

The keyboard disassembly procedure for the T1850 range is exactly the same as for the T1800. Please refer to the T1800 section for details on how to remove and refit the keyboard.

Modem Cradle

The modem cradle disassembly procedure for the T1850 range is exactly the same as for the T1800. Please refer to the T1800 section for details on how to remove and refit the modem cradle.

Top Cover

The top cover disassembly procedure for the T1850 range is exactly the same as for the T1800. Please refer to the T1800 section for details on how to remove and refit the top cover.

Hard Disk Drive

The hard disk drive disassembly procedure for the T1850 range is exactly the same as for the T1800. Please refer to the T1800 section for details on how to remove and refit the hard disk drive.

Floppy Diskette Drive and RTC Battery

The floppy diskette drive and RTC battery disassembly procedure for the T1850 range is exactly the same as for the T1800. Please refer to the T1800 section for details on how to remove and refit the floppy diskette drive and RTC battery.

Battery Terminals and Power Supply Board

The battery terminals and power supply board disassembly procedure for the T1850 range is exactly the same as for the T1800. Please refer to the T1800 section for details on how to remove and refit the battery terminals and power supply board.

System Board

The system board disassembly procedure for the T1850 range is exactly the same as for the T1800. Please refer to the T1800 section for details on how to remove and refit the system board.

Display Mask
The display mask disassembly procedure for the T1850 range is exactly the same as for the T1800. Please refer to the T1800 section for details on how to remove and refit the display mask.

FL Inverter - T1850
The FL inverter disassembly procedure for the monochrome version of the T1850 is exactly the same as for the T1800. Please refer to the T1800 section for details on how to remove and refit the FL inverter.

Display Module - T1850
The display module disassembly procedure for the monochrome version of the T1850 is exactly the same as for the T1800. Please refer to the T1800 section for details on how to remove and refit the display module.

FL Inverter and Display Module - T1850C

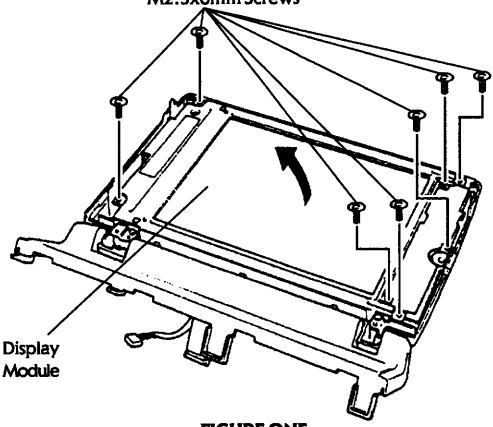

FIGURE ONE

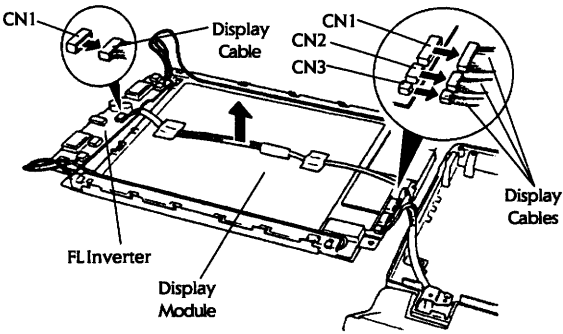

FIGURE TWO

1) Switch the T1850 off and disconnect all interconnecting cables including the mains adapter.
2) Remove the BATTERY PACK as described earlier in this section.
3) Follow all instructions as detailed under the T1800 disassembly procedure **FL Inverter, Display Module and Fluorescent Lamp (to step (6))** before proceeding.
4) Remove the seven screws (M2.5x6mm) securing the DISPLAY MODULE and FL INVERTER, noting that one screw also secures a grounding wire, and carefully pivot this complete assembly over to lie on the left of the TOP COVER (FIGURES ONE and TWO).
5) If present, peel back any tape securing the DISPLAY CABLE to the back of the DISPLAY MODULE.
6) Disconnect the single DISPLAY CABLE from CN1 on the FL INVERTER and the three DISPLAY CABLES from CN1, CN2 and CN3 on the back of the DISPLAY MODULE (FIGURE TWO).

/continued/

FL Inverter and Display Module - T1850C (continued)

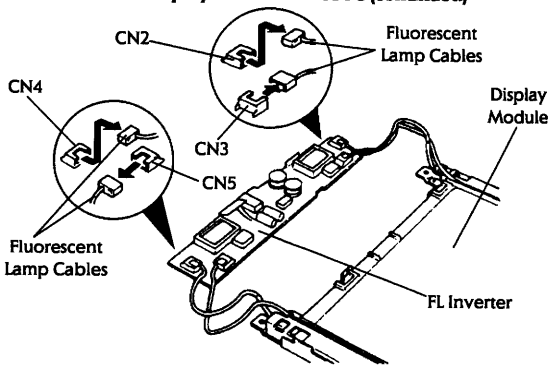

FIGURE THREE

7) Disconnect the four FLUORESCENT LAMP CABLES from CN2 (red plug), CN3 (white plug), CN4 (red plug) and CN5 (white plug) and separate the FL INVERTER from the DISPLAY MODULE (FIGURE THREE).
8) Refit the FL INVERTER and the DISPLAY MODULE in reverse order ensuring that the grounding wire is properly attached.

LED Board and Backup Battery

The LED board and backup battery disassembly procedure for the T1850 range is exactly the same as for the T1800. Please refer to the T1800 section for details on how to remove and refit the LED board and backup battery.

Real Mode Memory Map

The real mode memory map for the T1850 range is exactly the same as for the T1800. Please refer to the T1800 section for details on how the system's real mode memory map is laid out.

Interrupt Assignments

The interrupt assignments for the T1850 range are exactly the same as for the T1800. Please refer to the T1800 section for details on how interrupts are assigned.

Direct Memory Access Assignments

The direct memory access assignments for the T1850 range are exactly the same as for the T1800. Please refer to the T1800 section for details on how direct memory access channels are assigned.

Input/Output Port Assignments

The input/output port assignments for the T1850 range are exactly the same as for the T1800. Please refer to the T1800 section for details on how input/output ports are assigned.

This page is intentionally left blank

T1900
Range

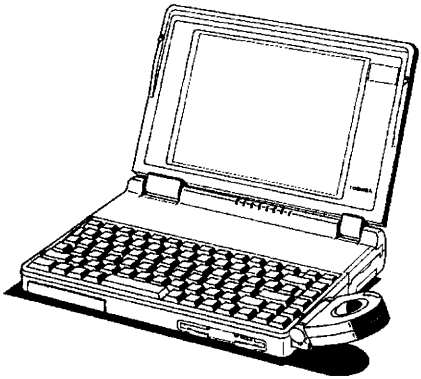

T1900 Notebook Range

Section Index

Product Specifications 76
Mains Adapter and Battery Specifications 76
Product Features 76
Battery Release Procedure 77
Upgrade Procedures 78
  Memory Expansion Cards 78
  PCMCIA Cards 79
Setup Screen Layout 80
FN-Popup Window Layout 80
Disassembly Procedures 81
  Top Cover 81
  Keyboard 82
  Keyboard Base Plate and Backup Battery 83
  Hard Disk Drive 84
  System Board Cover Plate 85
  Display Unit 86
  System Board 87
  Power Supply, Parallel and Serial Board 88
  Floppy Diskette Drive and Mouse/Keyboard Board . . . 90
  Display Mask 91
  FL Inverter Board (T1900) 92
  FL Inverter Board (T1900C) 93
  Display Module 94
Real Mode Memory Map 95
Interrupt Assignments 96
Direct Memory Access Assignments 96
Input/Output Port Assignments 97

T1900 Notebook Range

Product Specifications

	T1900	T1900C
Processor	i80486SX	i80486SX
Clock Speed	20MHz	20MHz
Standard Memory	4MBytes	4MBytes
Maximum Memory	20MBytes	20MBytes
Hard Disk Drive	120/200Mb	120/200Mb
Floppy Diskette Drive	1.44MBytes	1.44MBytes
Display Type	STN Mono	ASTN Colour
Display Resolution	VGA	VGA
Display Colour Palette	64 Grey Scales	256 Colours
Internal Modem Slot	Yes (PCMCIA)	Yes (PCMCIA)
Serial Port	Yes	Yes
Parallel Port	Yes	Yes
Monitor Port	Yes	Yes
PS/2 Mouse Port	Yes	Yes
PS/2 Keyboard Port	Yes	Yes
Keyboard Type	84-Keys	84-Keys
DeskStation Expansion	None	None
Maximum Battery Life	4 Hours	3.5 Hours
Weight (kg/lb)	2.9/6.4	3.2/6.9

Mains Adapter and Battery Specifications

Mains Adapter
Toshiba Part Number PA2478U
Output Rating 18 volts, 1.7 amps

Battery Pack
Toshiba Part Number PA2420U
Power Rating
2,400mA/hour, 12 volts DC

Product Features

* 3.3 Volt Processor Technology
* Processor Reset Button
* Resume Mode Provision
* Hard-RAM Provision
* Max-Time Power Management
* Advanced Power Management
* QuickPort BallPoint Mouse
* PCMCIA Type III Slot (14.5mm)
* Kensington Cable Lock
* Password Security
* NiH_2 Battery
* Flash BIOS Firmware

Please refer to the Appendices at the back of this booklet for a description of some of the features described above

Battery Release Procedure

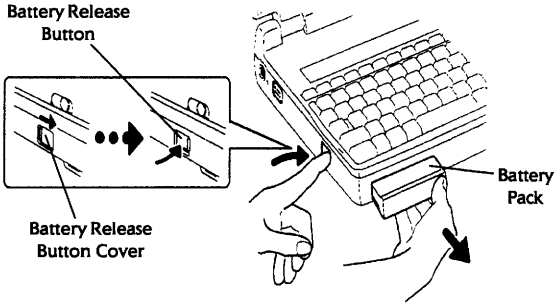

FIGURE ONE

1) Switch the T1900 off and disconnect all interconnecting cables including the mains adapter.
2) Slide the BATTERY RELEASE BUTTON COVER towards the front of the system and press the BATTERY RELEASE BUTTON located behind it (FIGURE ONE). The BATTERY PACK will pop out slightly.
3) Grasp the BATTERY PACK and remove it from the system.
4) Refit the BATTERY PACK by sliding it back into the system, ensuring that it is locked firmly in place.

Memory Expansion Cards

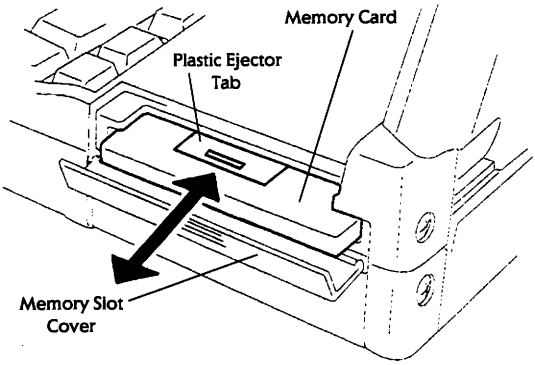

FIGURE ONE

1) Ensure the T1900 is configured to start in Boot Mode.
2) Switch the T1900 off and disconnect all interconnecting cables including the mains adapter.
3) Open the screen.
4) Turn the T1900 around so that its right hand side is towards you.
5) Open the MEMORY SLOT COVER (FIGURE ONE).
6) Insert the MEMORY CARD ensuring that it is oriented correctly (FIGURE ONE).
6a) Remove the MEMORY CARD by grasping the PLASTIC EJECTOR TAB and pulling it outwards.
7) Close the MEMORY SLOT COVER.
8) Turn on the T1900. The system will automatically recognise the additional memory during the boot sequence.

CAUTION **Do not touch the connecting edge of the memory card as debris, oil or grease in or on this connector may cause memory access problems.**

PCMCIA Cards

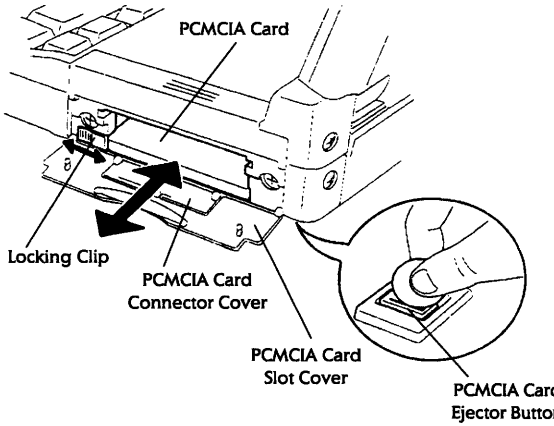

FIGURE ONE

1) Ensure the T1900 is configured to start in Boot Mode.
2) Switch the T1900 off and disconnect all interconnecting cables including the mains adapter.
3) Turn the T1900 around so that its right hand side is towards you.
4) Open the PCMCIA CARD SLOT COVER (FIGURE ONE).
5) Ensure the LOCKING CLIP is pushed to the left (FIGURE ONE).
6) Insert the PCMCIA CARD ensuring that it is oriented correctly and then slide the LOCKING CLIP to the right to secure the card in place (FIGURE ONE).

6a) Remove the PCMCIA CARD by sliding the LOCKING CLIP to the left and then, using a coin, pushing the PCMCIA CARD EJECTOR BUTTON, located underneath the system, as far out towards the right hand edge of the system as is possible (FIGURE ONE). The PCMCIA CARD will be partially ejected from the system allowing it to be grasped and completely removed.

7) If the PCMCIA CARD requires an external interface, open the PCMCIA CARD CONNECTOR COVER within the PCMCIA CARD SLOT COVER as needed (FIGURE ONE).
8) Close the PCMCIA CARD SLOT COVER.
9) Turn on the T1900. If required you may need to configure the PCMCIA card to operate correctly - refer to the manufacturer's documentation for details on how to achieve this.

CAUTION **Do not touch the connecting edge of the PCMCIA card as debris, oil or grease in or on this connector may cause access problems.**

Setup Screen Layout

T1900 SETUP — BIOS version = x.xx

MEMORY		HARD DISK	
Total	= 4096KB	Capacity = 120MB	
Base	= 640KB		
Extended	= 3328KB	**POWER ON PASSWORD**	
Hard RAM	= 0KB	Not Registered	
Shadow BIOS ROM	= Enable (128KB)	**OTHERS**	
DISPLAY		Power-up Mode	= Boot
Display Adaptor	= VGA Compatible	CPU Cache	= Enabled
LCD Display Mode	= Color	Processing Speed	= High
LCD Gray Scale Level	= Normal 64 Levels	Battery Save Mode	= Automatic (Long Life)
COM/PCMCIA/FDD/PRT		Popup	= Enabled
Serial Port	= COM1 (IRQ4/3F8H)	Speaker	= Enabled
PC Card Slot	= PCMCIA	Battery Alarm	= Enabled
External FDD/PRT	= Printer	Panel Power On/Off	= Disabled
Printer Port Type	= Output		

↑↓←→: Select Items, Space, BkSp : Change values
Esc: Exit without saving, Home: Set default values, End: Save changes and exit

Note 1:- The option to change the **LCD Gray Scale Level** does not appear on the setup screen for the T1900C.

Note 2:- The **Panel Power On/Off** option only appears when the machine is configured to power-up in **Resume Mode.**

Note 3:- In addition to this basic setup screen information, there are a number of pre-configured settings associated with the **Battery Save Mode** option. When selected, these settings affect the way the T1900/T1900C manages its battery usage as follows:-

Automatic (Normal Life)		Automatic (Long Life)	
CPU Sleep Mode	= Disabled	CPU Sleep Mode	= Enabled
HDD Auto Off	= Disabled	HDD Auto Off	= 03Min.
Display Auto Off	= Disabled	Display Auto Off	= 03Min.

FN-Popup Window Layout

The T1900/T1900C FN-Popup user status and configuration window allows the following information to be viewed and/or changed:-

Page One

Remaining Battery Capacity : E■■■■■■■F
LCD Gray Scale Level : Normal 64 Levels*
Power-up Mode : Resume Boot
Battery Save : Automatic (Normal Life)
Processing Speed : High Low

Page Two

Modem Power : On Off**
Panel Power On/Off : Enabled Disabled
Speaker : Enabled Disabled
Battery Alarm : Enabled Disabled

* The **LCD Gray Scale Level** option does not appear on the FN-Popup window for the T1900C.

** The **Modem Power** option will only be displayed if the **PC Card Slot** option within the setup screen is set to **Others.**

Disassembly Procedures

Top Cover

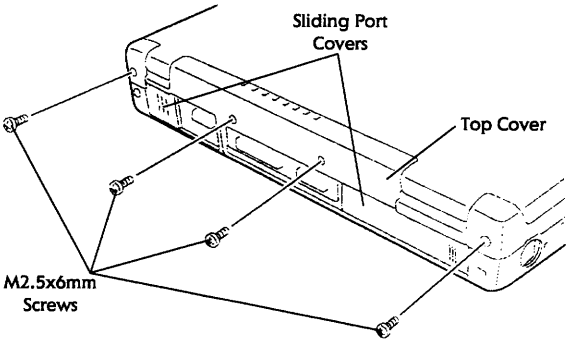

FIGURE ONE

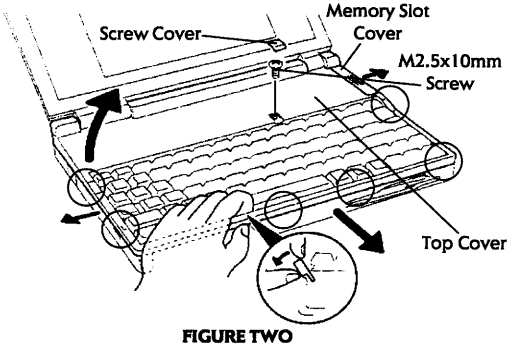

FIGURE TWO

1) Switch the T1900 off and disconnect all interconnecting cables including the mains adapter.
2) Remove the BATTERY PACK as described earlier in this section.
3) Should they be installed, remove the PCMCIA card and/or MEMORY CARD as described earlier in this section.
4) Turn the T1900 around so that its rear panel is towards you.
5) Note the orientation of the SLIDING PORT COVERS then remove the four screws (M2.5x6mm) securing the TOP COVER (FIGURE ONE).
6) Turn the T1900 around so that its front edge is towards you, open the screen and push it back until it is lying flat.
7) Open the MEMORY SLOT COVER (FIGURE TWO).
8) Remove the SCREW COVER located immediately above the F9 key and remove the screw (M2.5x10mm) underneath it (FIGURE TWO).
9) Release the latches (circled) around the edge of the TOP COVER by pushing and rotating the frame as shown (FIGURE TWO).
10) Lift the TOP COVER away from, and towards the right of, the system unit (FIGURE TWO).
11) Refit the TOP COVER in reverse order taking care to ensure that the SLIDING PORT COVERS are oriented correctly.

Keyboard

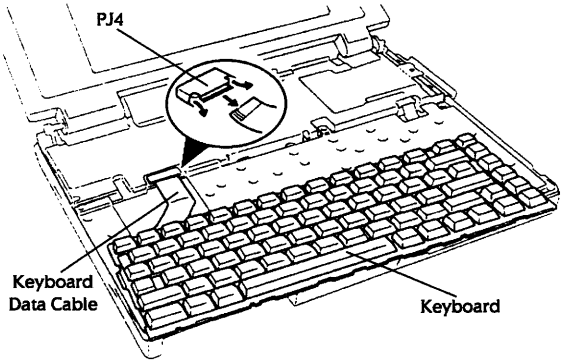

FIGURE THREE

1) Switch the T1900 off and disconnect all interconnecting cables including the mains adapter.
2) Remove the BATTERY PACK as described earlier in this section.
3) Should they be installed, remove the PCMCIA card and/or MEMORY CARD as described earlier in this section.
4) Follow all instructions as detailed under the disassembly procedure **Top Cover** before proceeding.
5) Lift the KEYBOARD partially out of the system unit to expose the ZIF connector PJ4 (FIGURE THREE).
6) Release the locking pegs on ZIF connector PJ4, carefully withdraw the KEYBOARD DATA CABLE and remove the KEYBOARD from the system (FIGURE THREE).
7) Refit the KEYBOARD in reverse order.

Keyboard Base Plate and Backup Battery

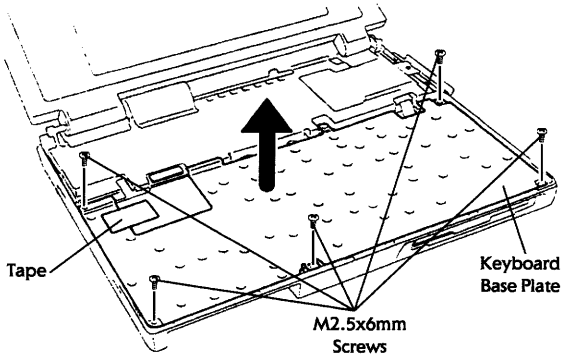

FIGURE FOUR

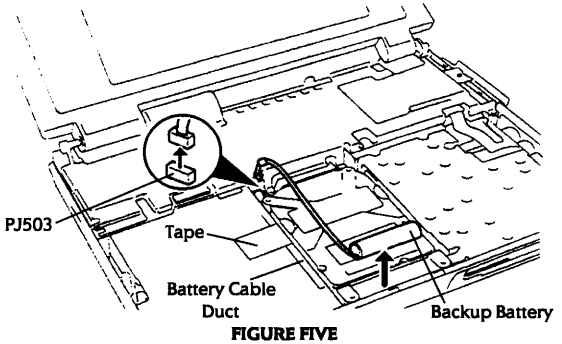

FIGURE FIVE

1) Switch the T1900 off and disconnect all interconnecting cables including the mains adapter.
2) Remove the BATTERY PACK as described earlier in this section.
3) Should they be installed, remove the PCMCIA card and/or MEMORY CARD as described earlier in this section.
4) Follow all instructions as detailed under the disassembly procedures **Top Cover** and **Keyboard** before proceeding.
5) Peel back the TAPE at the top left hand corner of the KEYBOARD BASE PLATE (FIGURE FOUR).
6) Remove the five screws (M2.5x6mm) securing the KEYBOARD BASE PLATE and remove it (FIGURE FOUR).
7) Peel back the TAPE covering the BATTERY CABLE DUCT (FIGURE FIVE).
8) Unplug the BACKUP BATTERY from PJ503 and remove it from the system noting the cable's path within the BATTERY CABLE DUCT (FIGURE FIVE).
9) Refit the BACKUP BATTERY and KEYBOARD BASE PLATE in reverse order ensuring that cables for the BACKUP BATTERY are correctly routed within the BATTERY CABLE DUCT.

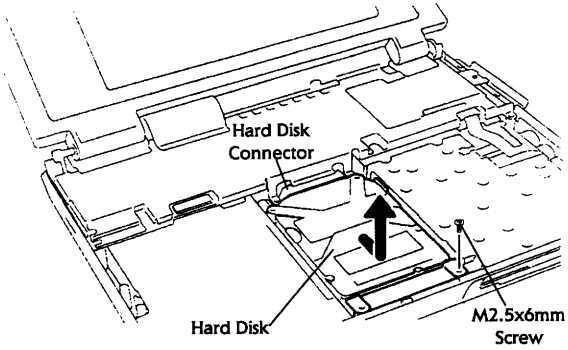

FIGURE SIX

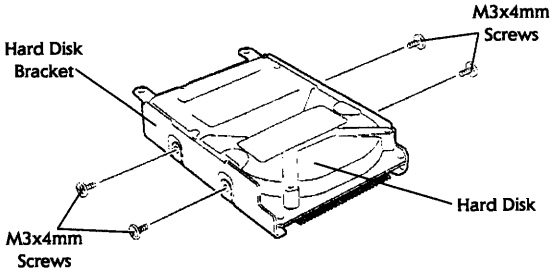

FIGURE SEVEN

1) Switch the T1900 off and disconnect all interconnecting cables including the mains adapter.
2) Remove the BATTERY PACK as described earlier in this section.
3) Should they be installed, remove the PCMCIA card and/or MEMORY CARD as described earlier in this section.
4) Follow all instructions as detailed under the disassembly procedures **Top Cover, Keyboard** and **Keyboard Base Plate and Backup Battery** before proceeding.
5) Remove the screw (M2.5x6mm) securing the bottom right hand corner of the HARD DISK BRACKET (FIGURE SIX).
6) Pull the HARD DISK towards the front of the system unit to disconnect the HARD DISK CONNECTOR (FIGURE SIX).
7) Push the HARD DISK/HARD DISK BRACKET assembly to the right, lift it up from the front and carefully remove it from the system (FIGURE SIX).
8) Remove the four screws (M3x4mm) securing the HARD DISK BRACKET to the HARD DISK and remove the HARD DISK from it (FIGURE SEVEN).
9) Refit the HARD DISK in reverse order ensuring that extreme care is taken to align the pins on the HARD DISK CONNECTOR before the HARD DISK is pushed into the system unit.

System Board Cover Plate

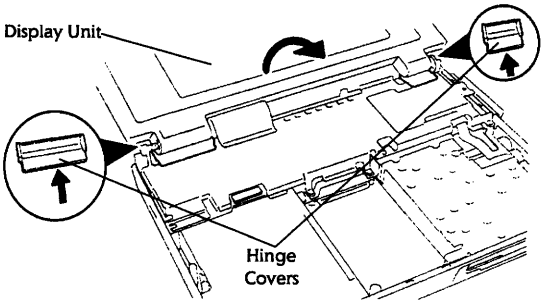

FIGURE EIGHT

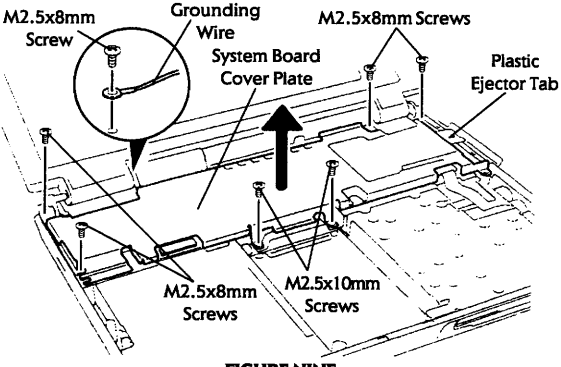

FIGURE NINE

1) Switch the T1900 off and disconnect all interconnecting cables including the mains adapter.
2) Remove the BATTERY PACK as described earlier in this section.
3) Should they be installed, remove the PCMCIA card and/or MEMORY CARD as described earlier in this section.
4) Follow all instructions as detailed under the disassembly procedures **Top Cover, Keyboard, Keyboard Base Plate and Backup Battery** and **Hard Disk Drive** before proceeding.
5) Position the DISPLAY UNIT vertically and push the two HINGE COVERS to the rear of the system to remove them (FIGURE EIGHT).
6) Pull the PLASTIC EJECTOR TAB fully to the right (FIGURE NINE).
7) Remove the six screws (M2.5x8mm and M2.5x10mm) at the left and right hand sides of the SYSTEM BOARD COVER PLATE and within the hard disk cavity (FIGURE NINE).
8) Carefully push the left hand hinge on the DISPLAY UNIT back slightly and remove the screw (M2.5x8mm) securing the GROUNDING WIRE beneath it (FIGURE NINE).
9) Lift off the SYSTEM BOARD COVER PLATE noting the position of the memory card ejector plate beneath it (FIGURE NINE).
10) Refit the SYSTEM BOARD COVER PLATE in reverse order ensuring that the memory card ejector plate is aligned correctly.

Display Unit

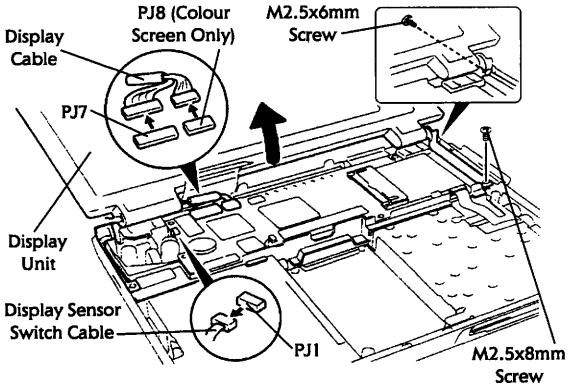

FIGURE TEN

1) Switch the T1900 off and disconnect all interconnecting cables including the mains adapter.
2) Remove the BATTERY PACK as described earlier in this section.
3) Should they be installed, remove the PCMCIA card and/or MEMORY CARD as described earlier in this section.
4) Follow all instructions as detailed under the disassembly procedures **Top Cover, Keyboard, Keyboard Base Plate and Backup Battery, Hard Disk Drive** and **System Board Cover Plate** before proceeding.
5) Carefully withdraw the DISPLAY SENSOR SWITCH CABLE and unplug it from PJ1 (FIGURE TEN).
6) Remove the screw (M2.5x6mm) from the rear right hand corner of the system unit (FIGURE TEN).
7) Remove the screw (M2.5x8mm) securing the right hand hinge bracket (FIGURE TEN).
8) Carefully lift off the DISPLAY UNIT, lie it behind the system unit and disconnect the DISPLAY CABLE from PJ7 and, for the T1900C only, PJ8 (FIGURE TEN).
9) Refit the DISPLAY UNIT in reverse order taking care to position the DISPLAY SENSOR SWITCH CABLE in such a way that it does not get trapped anywhere.

System Board

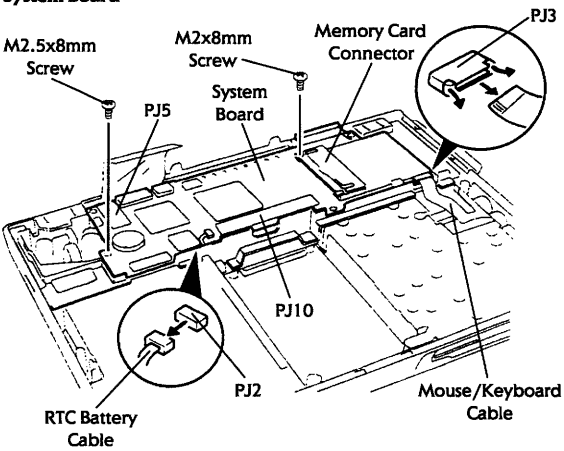

FIGURE ELEVEN

1) Switch the T1900 off and disconnect all interconnecting cables including the mains adapter.
2) Remove the BATTERY PACK as described earlier in this section.
3) Should they be installed, remove the PCMCIA card and/or MEMORY CARD as described earlier in this section.
4) Follow all instructions as detailed under the disassembly procedures **Top Cover, Keyboard, Keyboard Base Plate and Backup Battery, Hard Disk Drive, System Board Cover Plate** and **Display Unit** before proceeding.
5) Release the locking pegs on ZIF socket PJ3 and carefully withdraw the MOUSE/KEYBOARD CABLE (FIGURE ELEVEN).
6) Unplug the RTC BATTERY CABLE from PJ2 (FIGURE ELEVEN).
7) Remove the screw (M2.5x8mm) from the left hand side of the SYSTEM BOARD (FIGURE ELEVEN).
8) Remove the screw (M2x8mm) securing the SYSTEM BOARD through the MEMORY CARD CONNECTOR (FIGURE ELEVEN).
9) Place your fingers underneath the SYSTEM BOARD close to connectors PJ5 and PJ10 and carefully pull it vertically upwards to separate it from the board beneath (FIGURE ELEVEN).
10) Refit the SYSTEM BOARD in reverse order taking care to ensure that connectors PJ5 and PJ10 and correctly aligned before the boards are pressed together.

Power Supply, Parallel and Serial Board

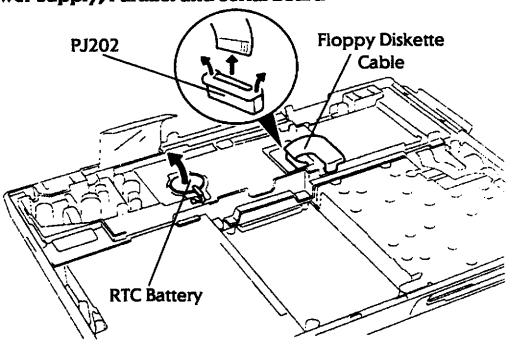

FIGURE TWELVE

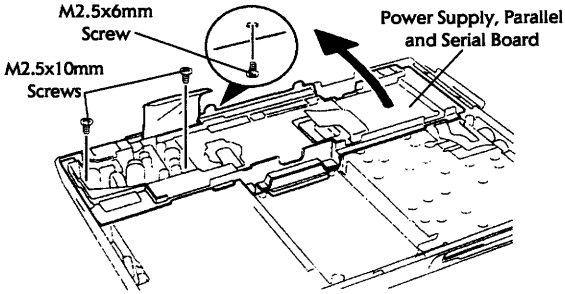

FIGURE THIRTEEN

1) Switch the T1900 off and disconnect all interconnecting cables including the mains adapter.
2) Remove the BATTERY PACK as described earlier in this section.
3) Should they be installed, remove the PCMCIA card and/or MEMORY CARD as described earlier in this section.
4) Follow all instructions as detailed under the disassembly procedures **Top Cover, Keyboard, Keyboard Base Plate and Backup Battery, Hard Disk Drive, System Board Cover Plate, Display Unit** and **System Board** before proceeding.
5) If required, remove the RTC BATTERY (FIGURE TWELVE).
5) Ensure that the PCMCIA CARD EJECTOR BUTTON on the underneath of the system unit is positioned fully out in the eject position.
6) Release the locking pegs on ZIF socket PJ202 and carefully withdraw the FLOPPY DISKETTE CABLE (FIGURE TWELVE).
7) Remove the two screws (M2.5x10mm) from within the power supply section (FIGURE THIRTEEN).
8) Remove the screw (M2.5x6mm) from underneath the rear edge of the system unit (FIGURE THIRTEEN).
9) Place your hand under the system unit and push on the PCMCIA CARD EJECTOR BUTTON to partially raise the POWER SUPPLY, PARALLEL AND SERIAL BOARD (FIGURE THIRTEEN).

/continued/

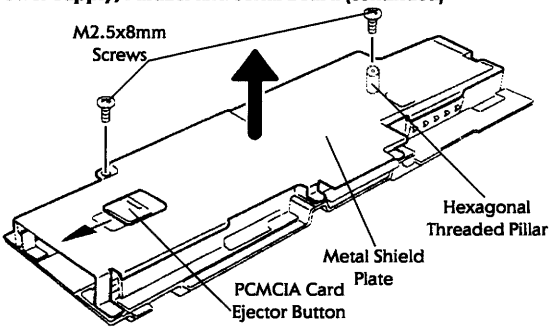

FIGURE FOURTEEN

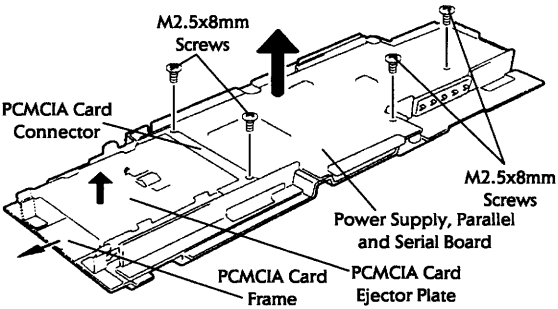

FIGURE FIFTEEN

10) Lift up the POWER SUPPLY, PARALLEL AND SERIAL BOARD at its right hand side and remove it from the system unit ensuring the FLOPPY DISKETTE CABLE is passed through the hole in the plastic frame (FIGURE THIRTEEN overleaf).
11) Turn the POWER SUPPLY, PARALLEL AND SERIAL BOARD upside down (FIGURE FOURTEEN).
12) Ensure the PCMCIA CARD EJECTOR BUTTON is in the eject position, remove the two screws (M2.5x8mm) securing the METAL SHIELD PLATE and lift it off taking care not to dislodge the PCMCIA CARD EJECTOR BUTTON. Note the position of the HEXAGONAL THREADED PILLAR on the underside of the assembly (FIGURE FOURTEEN).
13) Remove the PCMCIA CARD EJECTOR PLATE from the PCMCIA CARD FRAME (FIGURE FIFTEEN).
14) Remove the two screws (M2x8mm) from the PCMCIA CARD CONNECTOR (FIGURE FIFTEEN).
15) Remove the two screws (M2.5x8mm) near the battery terminals (FIGURE FIFTEEN).
16) Lift the POWER SUPPLY, PARALLEL AND SERIAL BOARD out of the plastic frame (FIGURE FIFTEEN).
17) Slide the PCMCIA CARD FRAME out of the plastic frame.
18) Refit the POWER SUPPLY, PARALLEL AND SERIAL BOARD in reverse order ensuring the PCMCIA slot components are aligned correctly and that the PCMCIA CARD EJECTOR BUTTON operates correctly.

Floppy Diskette Drive and Mouse/Keyboard Board

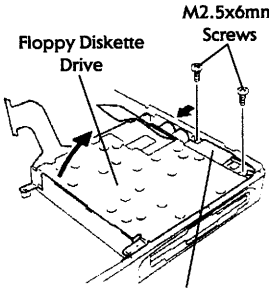

FIGURE SIXTEEN

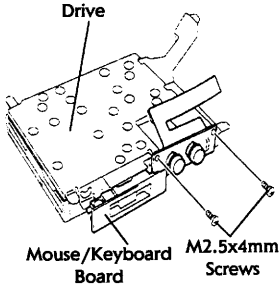

FIGURE SEVENTEEN

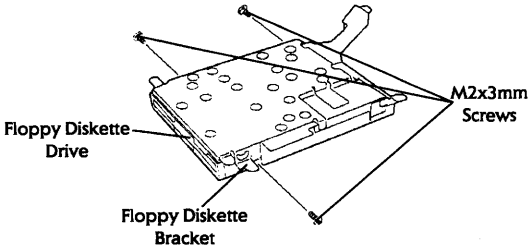

FIGURE EIGHTEEN

1) Switch the T1900 off and disconnect all interconnecting cables including the mains adapter.
2) Remove the BATTERY PACK as described earlier in this section.
3) Should they be installed, remove the PCMCIA card and/or MEMORY CARD as described earlier in this section.
4) Follow all instructions as detailed under the disassembly procedures **Top Cover, Keyboard, Keyboard Base Plate and Backup Battery, Hard Disk Drive, System Board Cover Plate, Display Unit, System Board** and **Power Supply, Parallel and Serial Board** before proceeding.
5) Remove the two screws (M2.5x6mm) securing the MOUSE/KEYBOARD BOARD into the system unit (FIGURE SIXTEEN).
6) Lift the FLOPPY DISKETTE DRIVE from its left hand edge while pushing the MOUSE/KEYBOARD BOARD inwards to release and lift out the complete assembly (FIGURE SIXTEEN).
7) Remove the two screws (M2.5x4mm) securing the MOUSE/KEYBOARD BOARD to the FLOPPY DISKETTE DRIVE and remove it (FIGURE SEVENTEEN).
8) Remove the three screws (M2x3mm) securing the FLOPPY DISKETTE BRACKET to the FLOPPY DISKETTE DRIVE and remove the FLOPPY DISKETTE DRIVE from it (FIGURE EIGHTEEN).
9) Refit the FLOPPY DISKETTE DRIVE and the MOUSE/KEYBOARD BOARD in reverse order ensuring that the sliding plastic door over the BallPoint Mouse port, together with its associated plastic leaf spring, are assembled correctly.

Display Mask

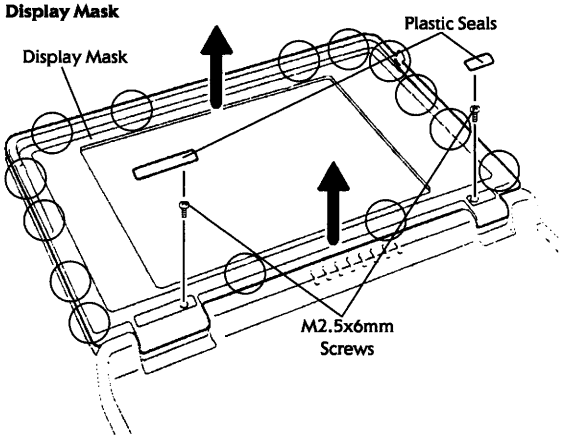

FIGURE NINETEEN

1) Switch the T1900 off and disconnect all interconnecting cables including the mains adapter.
2) Remove the BATTERY PACK as described earlier in this section.
3) Remove the two PLASTIC SEALS from the left and right hinge arms of the DISPLAY MASK and remove the two screws (M2.5x6mm) hidden underneath them (FIGURE NINETEEN).
4) Starting with the top four, carefully release the fourteen latches (circled) securing the DISPLAY MASK to the DISPLAY UNIT and remove it ensuring that the display catches, which hold the clamshell together when the T1900 is closed, do not obstruct the DISPLAY MASK and damage it (FIGURE NINETEEN).
5) Refit the DISPLAY MASK in reverse order taking care to ensure that no cables are trapped and that all the latches are snapped together correctly.

FL Inverter Board (T1900)

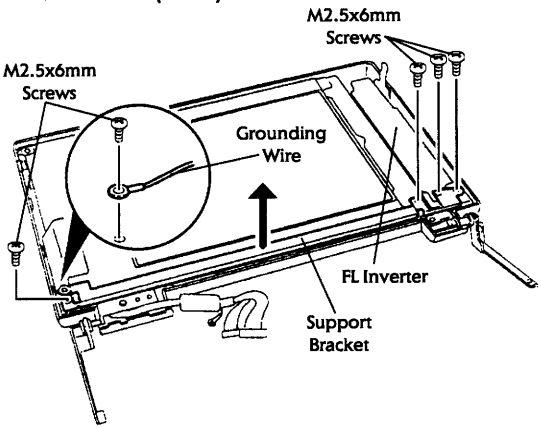

FIGURE TWENTY

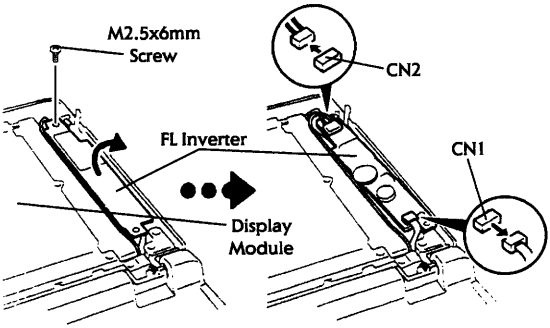

FIGURE TWENTY ONE

1) Switch the T1900 off and disconnect all interconnecting cables including the mains adapter.
2) Remove the BATTERY PACK as described earlier in this section.
3) Follow all instructions as detailed under the disassembly procedure **Display Mask** before proceeding.
4) Remove the five screws (M2.5x6mm) securing the SUPPORT BRACKET to the DISPLAY UNIT and FL INVERTER and remove it noting that one screw also secures a GROUNDING WIRE (FIGURE TWENTY).
5) Remove the screw (M2.5x6mm) securing the FL INVERTER to the DISPLAY UNIT and carefully pivot it away from the DISPLAY MODULE taking care not to catch the contrast wheel (FIGURE TWENTY ONE).
6) Disconnect the FL INVERTER cables from CN1 and CN2 and remove the FL INVERTER (FIGURE TWENTY ONE).
7) Refit the FL INVERTER in reverse order ensuring that the GROUNDING WIRE is correctly attached.

FL Inverter Board (T1900C)

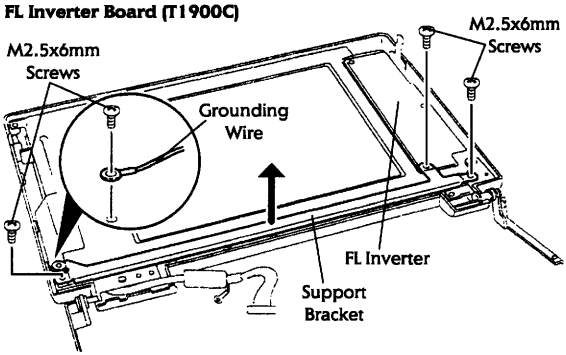

FIGURE TWENTY TWO

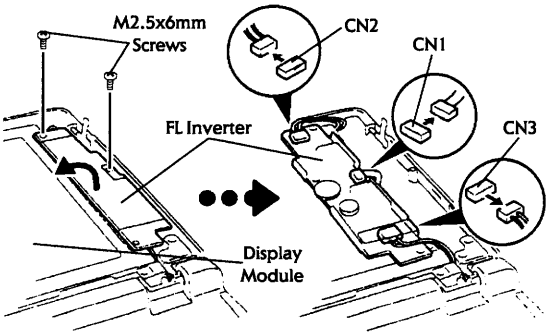

FIGURE TWENTY THREE

1) Switch the T1900C off and disconnect all interconnecting cables including the mains adapter.
2) Remove the BATTERY PACK as described earlier in this section.
3) Follow all instructions as detailed under the disassembly procedure **Display Mask** before proceeding.
4) Remove the four screws (M2.5x6mm) securing the SUPPORT BRACKET to the DISPLAY UNIT and FL INVERTER and remove it noting that one screw also secures a GROUNDING WIRE (FIGURE TWENTY TWO).
5) Remove the two screws (M2.5x6mm) securing the FL INVERTER to the DISPLAY UNIT and carefully pivot it towards the DISPLAY MODULE taking care not to catch the contrast wheel (FIGURE TWENTY THREE).
6) Disconnect the FL INVERTER cable from CN1, the fluorescent lamp cable from CN2 and remove the FL INVERTER (FIGURE TWENTY THREE).
7) Refit the FL INVERTER in reverse order ensuring that the GROUNDING WIRE is correctly attached.

Display Module

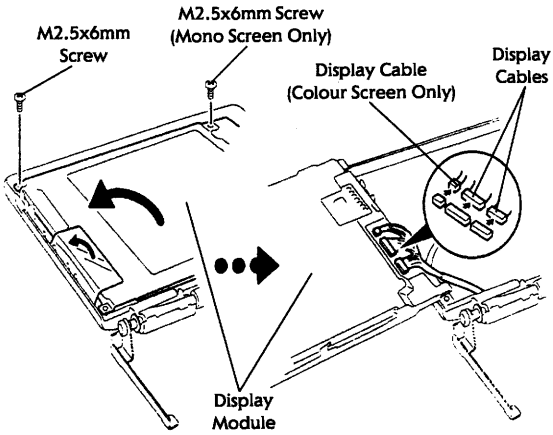

FIGURE TWENTY FOUR

1) Switch the T1900 off and disconnect all interconnecting cables including the mains adapter.
2) Remove the BATTERY PACK as described earlier in this section.
3) Follow all instructions as detailed under the disassembly procedures **Display Mask** and **FL Inverter Board (T1900)** or **FL Inverter Board (T1900C)** before proceeding.
4) Push the DISPLAY UNIT back until it is lying flat.
5) For the T1900, remove the two screws (M2.5x6mm) securing the DISPLAY MODULE to the DISPLAY UNIT and carefully pivot it over to lie on the left hand side of the DISPLAY UNIT (FIGURE TWENTY FOUR).
6) For the T1900C, remove the screw (M2.5x6mm) securing the DISPLAY MODULE to the DISPLAY UNIT and carefully pivot it over to lie on the left hand side of the DISPLAY UNIT (FIGURE TWENTY FOUR).
7) For the T1900, disconnect the two DISPLAY CABLES from the back of the DISPLAY MODULE (FIGURE TWENTY FOUR).
8) For the T1900C, disconnect the three DISPLAY CABLES from the back of the DISPLAY MODULE (FIGURE TWENTY FOUR).
9) Refit the DISPLAY MODULE in reverse order taking care to ensure that the DISPLAY CABLES do not become trapped in any way.

Real Mode Memory Map

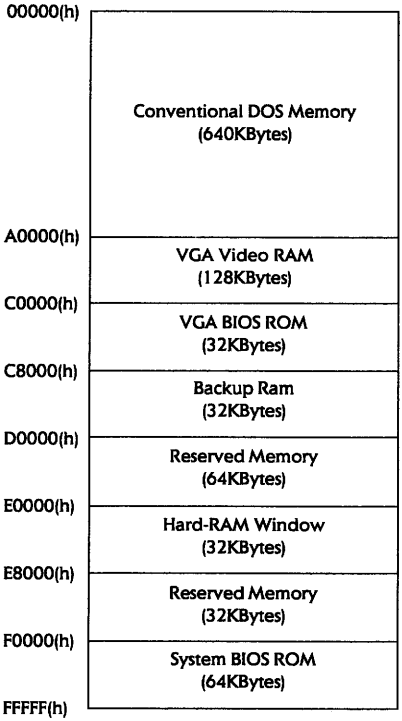

Interrupt Assignments

Interrupt Controller	Interrupt Level	Interrupt Assignment
-	NMI	RAM Parity Error, I/O Channel Error
1	0	Timer
	1	Keyboard
	2	Interrupt Controller for Levels 8 to 15
	3	COM2:
	4	COM1:
	5	Printer (LPT2:)
	6	Floppy Diskette Controller
	7	Printer (LPT1:)
2	8	Real Time Clock
	9	Software Redirect to INT 0A(h)
	10	Reserved
	11	Reserved
	12	PS/2 Mouse
	13	Reserved
	14	Hard Disk Controller
	15	Reserved

Direct Memory Access Assignments

DMA Controller	Channel Number	DMA Assignment
1	0	Not Used
	1	Reserved
	2	Floppy Diskette Drive
	3	Reserved
2	4	Cascade for DMA Controller One
	5	Reserved
	6	Reserved
	7	Not Used

Input/Output Port Assignments

I/O Port Address	Device/Function
000(h) to 01F(h)	82C37 - DMA Controller One
020(h) to 03F(h)	82C59 - Programmable Interrupt Controller One
040(h) to 05F(h)	82C54 - Timer
060(h) to 06F(h)	80C42 - Keyboard Controller
070(h)	NMI Mask Register
070(h) to 07F(h)	Real Time Clock
080(h) to 09F(h)	DMA Page Register
0A0(h) to 0BF(h)	82C59 - Programmable Interrupt Controller Two
0C0(h) to 0DF(h)	82C37 - DMA Controller Two
0E0(h) to 0EF(h)	Special Register
0F0(h) to 0F7(h)	Math Co-Processor
100(h) to 1EF(h)	VGA
1F0(h) to 1FF(h)	Hard Disk Controller
200(h) to 207(h)	Game Controller
208(h) to 20F(h)	Not Used
210(h) to 217(h)	Expansion Unit
218(h) to 277(h)	Not Used
278(h) to 27F(h)	Printer (LPT2:)
280(h) to 2A7(h)	Not Used
2A8(h) to 2AF(h)	Reserved for EMS Memory
2B0(h) to 2B7(h)	Not Used
2B8(h) to 2BF(h)	Reserved for EMS Memory
2C0(h) to 2E7(h)	Not Used
2E8(h) to 2EF(h)	Reserved for EMS Memory
2F0(h) to 2F7(h)	Not Used
2F8(h) to 2FF(h)	COM2:
300(h) to 31F(h)	Prototype Card
320(h) to 32F(h)	Hard Disk Controller (XT Type)
330(h) to 337(h)	Not Used
338(h) to 33F(h)	COM3:
340(h) to 377(h)	Not Used
378(h) to 37F(h)	Printer (LPT1:)
380(h) to 38F(h)	2nd Bisynchronous Communications Port

/continued/

I/O Port Address	Device/Function
390(h) to 39F(h)	Not Used
3A0(h) to 3AF(h)	1st Bisynchronous Communications Port
3B0(h) to 3BF(h)	Monochrome Display Adapter / Printer (LPT3:)
3C0(h) to 3DF(h)	CGA, EGA and VGA
3E0(h) to 3E7(h)	Not Used
3E8(h) to 3EF(h)	COM3:
3F0(h) to 3F7(h)	Floppy Diskette Controller
3F8(h) to 3FF(h)	COM1:
400(h) to 47F(h)	Not Used
480(h) to 49F(h)	DMA High Page Register

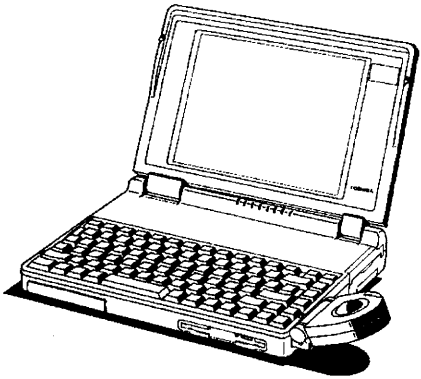

T1900S Notebook

Section Index

Product Specifications 100
Mains Adapter and Battery Specifications 100
Product Features 100
Battery Release Procedure 101
Upgrade Procedures 101
  Memory Expansion Cards 101
  PCMCIA Cards 101
Setup Screen Layout 101
FN-Popup Window Layout 102
Disassembly Procedures 102
  Top Cover 102
  Keyboard 102
  Keyboard Base Plate and Backup Battery 102
  Hard Disk Drive 102
  System Board Cover Plate 102
  Display Unit 102
  System Board 103
  Power Supply, Parallel and Serial Board 103
  Floppy Diskette Drive and Mouse/Keyboard Board . . . 103
  Display Mask 103
  FL Inverter Board 104
  Display Module 105
Real Mode Memory Map 106
Interrupt Assignments 107
Direct Memory Access Assignments 107
Input/Output Port Assignments 107

T1900S Notebook

Product Specifications

	T1900S
Processor	i80486SX
Clock Speed	25MHz
Standard Memory	4MBytes
Maximum Memory	20MBytes
Hard Disk Drive	120Mb
Floppy Diskette Drive	1.44MBytes
Display Type	STN Mono
Display Resolution	VGA
Display Colour Palette	64 Grey Scales
Internal Modem Slot	Yes (PCMCIA)
Serial Port	Yes
Parallel Port	Yes
Monitor Port	Yes
PS/2 Mouse Port	Yes
PS/2 Keyboard Port	Yes
Keyboard Type	84-Keys
DeskStation Expansion	None
Maximum Battery Life	4 Hours
Weight (kg/lb)	3.2/6.9

Mains Adapter and Battery Specifications

Mains Adapter
Toshiba Part Number PA2478U
Output Rating 18 volts, 1.7 amps

Battery Pack
Toshiba Part Number PA2420U
Power Rating
2,400mA/hour, 12 volts DC

Product Features

* 3.3 Volt Processor Technology
* Processor Reset Button
* Resume Mode Provision
* Max-Time Power Management
* Advanced Power Management
* QuickPort BallPoint Mouse
* PCMCIA Type III Slot (14.5mm)
* Kensington Cable Lock
* Password Security
* NiH_2 Battery
* Flash BIOS Firmware

Please refer to the Appendices at the back of this booklet for a description of some of the features described above

Battery Release Procedure

The battery release procedure for the T1900S is exactly the same as for the T1900. Please refer to the T1900 section for details on how to remove and install additional battery packs.

Upgrade Procedures

Memory Expansion Cards

The memory upgrade procedure for the T1900S is exactly the same as for the T1900. Please refer to the T1900 section for details on how to install additional memory cards.

PCMCIA Cards

The PCMCIA card upgrade procedure for the T1900S is exactly the same as for the T1900. Please refer to the T1900 section for details on how to install additional PCMCIA card options.

Setup Screen Layout

SYSTEM SETUP — BIOS version = x.xx

MEMORY		HARD DISK	
Total	= 4096KB	Capacity = 120MB	
Base	= 640KB		
Extended	= 3328KB	**POWER ON PASSWORD**	
Shadow BIOS ROM	= 128KB	Not Registered	
DISPLAY		**OTHERS**	
Display Adaptor	= VGA Compatible	Power-up Mode	= Boot
LCD Display Mode	= Color	CPU Cache	= Enabled
LCD Gray Scale Level	= Normal 64 Levels	Processing Speed	= High
		Battery Save Mode	= Automatic (Normal Life)
COM/PCMCIA/FDD/PRT		Popup	= Enabled
Serial Port	= COM1 (IRQ4/3F8H)	Speaker	= Enabled
PC Card Slot	= PCMCIA	Battery Alarm	= Enabled
External FDD/PRT	= Printer	Panel Power On/Off	= Disabled
Printer Port Type	= Output	Boot Priority	= FDD →HDD

↑↓←→: Select Items, Space, BkSp : Change values
Esc: Exit without saving, Home: Set default values, End: Save changes and exit

Note 1:- The **Panel Power On/Off** option only appears when the machine is configured to power-up in **Resume Mode**.

Note 2:- In addition to this basic setup screen information, there are a number of pre-configured settings associated with the **Battery Save Mode** option. When selected, these settings affect the way the T1900S manages its battery usage as follows:-

Automatic (Normal Life)		Automatic (Long Life)	
CPU Sleep Mode	= Disabled	CPU Sleep Mode	= Enabled
HDD Auto Off	= Disabled	HDD Auto Off	= 03Min.
Display Auto Off	= Disabled	Display Auto Off	= 03Min.
System Auto Off*	= Disabled	System Auto Off*	= 30Min.

* The **System Auto Off** option is offered only when the host system is configured for **Resume Mode** operation.

FN-Popup Window Layout

The T1900S FN-Popup user status and configuration window allows the following information to be viewed and/or changed:-

Page One

Remaining Battery Capacity : E▪▪▪▪▪▪▪F
LCD Gray Scale Level : Normal 64 Levels
Power-up Mode : Resume Boot
Battery Save : Automatic (Normal Life)
Processing Speed : High Low

Page Two

Modem Power : On Off*
Panel Power On/Off : Enabled Disabled
Speaker : Enabled Disabled
Battery Alarm : Enabled Disabled

* The **Modem Power** option will only be displayed if the **PC Card Slot** option within the setup screen is set to **Others**.

Disassembly Procedures

Top Cover
The top cover disassembly procedure for the T1900S is exactly the same as for the T1900 range. Please refer to the T1900 range section for details on how to remove and refit the top cover.

Keyboard
The keyboard disassembly procedure for the T1900S is exactly the same as for the T1900 range. Please refer to the T1900 range section for details on how to remove and refit the keyboard.

Keyboard Base Plate and Backup Battery
The keyboard base plate and backup battery disassembly procedure for the T1900S is exactly the same as for the T1900 range. Please refer to the T1900 range section for details on how to remove and refit the keyboard base plate and backup battery.

Hard Disk Drive
The hard disk drive disassembly procedure for the T1900S is exactly the same as for the T1900 range. Please refer to the T1900 range section for details on how to remove and refit the hard disk drive.

System Board Cover Plate
The system board cover plate disassembly procedure for the T1900S is exactly the same as for the T1900 range. Please refer to the T1900 range section for details on how to remove and refit the system board cover plate.

Display Unit
The display unit disassembly procedure for the T1900S is exactly the same as for the T1900 range with the exception of the considerations as noted below. Please refer to the T1900 range section, in conjunction with the below stated notes, for details on how to remove and refit the display unit.

1) The DISPLAY SENSOR SWITCH CABLE is plugged into PJ6.
2) The DISPLAY CABLE is plugged into the SYSTEM BOARD via PJ9.

System Board
The system board disassembly procedure for the T1900S is exactly the same as for the T1900 range with the exception of the consideration as noted below. Please refer to the T1900 range section, in conjunction with the below stated note, for details on how to remove and refit the display unit.

1) The SYSTEM BOARD is plugged into the POWER SUPPLY, PARALLEL AND SERIAL BOARD via PJ5 and PJ7.

Power Supply, Parallel and Serial Board
The power supply, parallel and serial board disassembly procedure for the T1900S is exactly the same as for the T1900 range. Please refer to the T1900 range section for details on how to remove and refit the power supply, parallel and serial board.

Floppy Diskette Drive and Mouse/Keyboard Board
The floppy diskette drive and mouse/keyboard board disassembly procedure for the T1900S is exactly the same as for the T1900 range. Please refer to the T1900 range section for details on how to remove and refit the floppy diskette drive and mouse/keyboard board.

Display Mask
The display mask disassembly procedure for the T1900S is exactly the same as for the T1900 range. Please refer to the T1900 range section for details on how to remove and refit the display mask.

FL Inverter Board

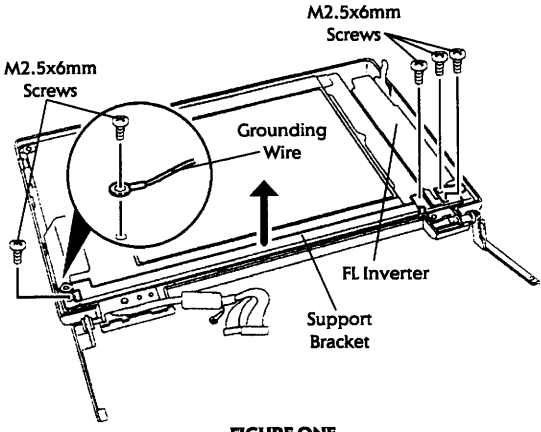

FIGURE ONE

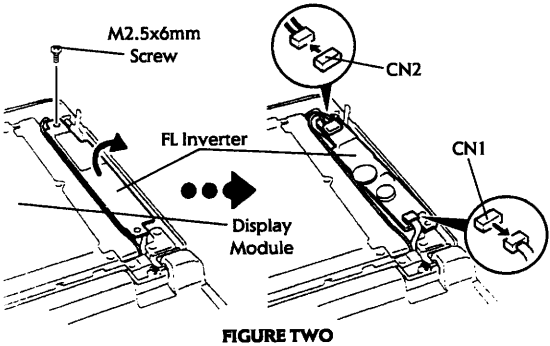

FIGURE TWO

1) Switch the T1900S off and disconnect all interconnecting cables including the mains adapter.
2) Remove the BATTERY PACK as described earlier in this section.
3) Follow all instructions as detailed under the disassembly procedure **Display Mask** before proceeding.
4) Remove the five screws (M2.5x6mm) securing the SUPPORT BRACKET to the DISPLAY UNIT and FL INVERTER and remove it noting that one screw also secures a GROUNDING WIRE (FIGURE ONE).
5) Remove the screw (M2.5x6mm) securing the FL INVERTER to the DISPLAY UNIT and carefully pivot it away from the DISPLAY MODULE taking care not to catch the contrast wheel (FIGURE TWO).
6) Disconnect the FL INVERTER cable from CN1, the fluorescent lamp cable from CN2 and remove the FL INVERTER (FIGURE TWO).
7) Refit the FL INVERTER in reverse order ensuring that the GROUNDING WIRE is correctly attached.

Display Module

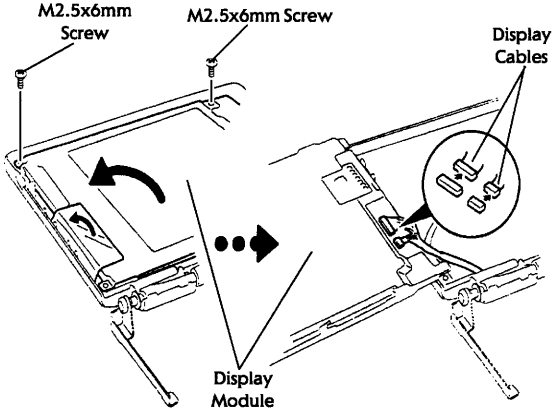

FIGURE THREE

1) Switch the T1900S off and disconnect all interconnecting cables including the mains adapter.
2) Remove the BATTERY PACK as described earlier in this section.
3) Follow all instructions as detailed under the disassembly procedures **Display Mask** and **FL Inverter Board** before proceeding.
4) Push the DISPLAY UNIT back until it is lying flat.
5) Remove the two screws (M2.5x6mm) securing the DISPLAY MODULE to the DISPLAY UNIT and carefully pivot it over to lie on the left hand side of the DISPLAY UNIT (FIGURE THREE).
6) Disconnect the two DISPLAY CABLES from CN1 and CN2 on the back of the DISPLAY MODULE (FIGURE THREE).
7) Refit the DISPLAY MODULE in reverse order taking care to ensure that the DISPLAY CABLES do not become trapped in any way.

Real Mode Memory Map

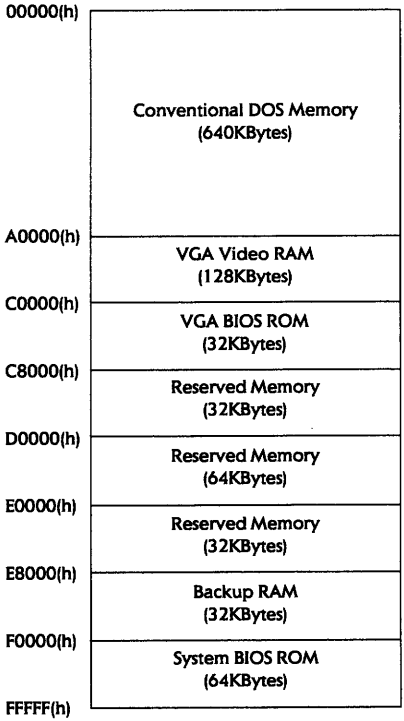

Interrupt Assignments

Interrupt Controller	Interrupt Level	Interrupt Assignment
-	NMI	RAM Parity Error, I/O Channel Error
1	0	Timer
	1	Keyboard
	2	Interrupt Controller for Levels 8 to 15
	3	COM2:
	4	COM1:
	5	Printer (LPT2:)
	6	Floppy Diskette Controller
	7	Printer (LPT1:)
2	8	Real Time Clock
	9	Software Redirect to INT 0A(h)
	10	Reserved
	11	Reserved
	12	PS/2 Mouse
	13	Math Co-Processor
	14	Hard Disk Controller
	15	Reserved

Direct Memory Access Assignments

The direct memory access assignments for the T1900S are exactly the same as for the T1900 range. Please refer to the T1900 section for details on how direct memory access channels are assigned.

Input/Output Port Assignments

The input/output port assignments for the T1900S are exactly the same as for the T1900 range. Please refer to the T1900 section for details on how input/output ports are assigned.

This page is intentionally left blank

T1900S

T1910 Notebook Range

Section Index

Product Specifications 110
Mains Adapter and Battery Specifications 110
Product Features 110
Battery Release Procedure 111
Upgrade Procedures 111
  Memory Expansion Cards 111
  PCMCIA Cards 111
Setup Screen Layout 111
FN-Popup Window Layout 112
Disassembly Procedures 112
  Top Cover 112
  Keyboard 112
  Keyboard Base Plate and Backup Battery 112
  Hard Disk Drive 112
  System Board Cover Plate 112
  Display Unit 112
  System Board 113
  Power Supply, Parallel and Serial Board 113
  Floppy Diskette Drive and Mouse/Keyboard Board . . . 113
  Display Mask 113
  FL Inverter Board (T1910) 113
  FL Inverter Board (T1910CS) 113
  Display Module 113
Real Mode Memory Map 114
Interrupt Assignments 115
Direct Memory Access Assignments 115
Input/Output Port Assignments 115

T1910 Notebook Range

Product Specifications

	T1910	T1910CS
Processor	i80486SX	i80486SX
Clock Speed	33MHz	33MHz
Standard Memory	4MBytes	4MBytes
Maximum Memory	20MBytes	20MBytes
Hard Disk Drive	120/200Mb	120/200Mb
Floppy Diskette Drive	1.44MBytes	1.44MBytes
Display Type	STN Mono	ASTN Colour
Display Resolution	VGA	VGA
Display Colour Palette	64 Grey Scales	256 Colours
Internal Modem Slot	Yes (PCMCIA)	Yes (PCMCIA)
Serial Port	Yes	Yes
Parallel Port	Yes	Yes
Monitor Port	Yes	Yes
PS/2 Mouse Port	Yes	Yes
PS/2 Keyboard Port	Yes	Yes
Keyboard Type	84-Keys	84-Keys
DeskStation Expansion	None	None
Maximum Battery Life	4 Hours	3.5 Hours
Weight (kg/lb)	2.9/6.4	3.2/6.9

Mains Adapter and Battery Specifications

Mains Adapter
Toshiba Part Number PA2478U
Output Rating 18 volts, 1.7 amps

Battery Pack
Toshiba Part Number PA2429U-R
Power Rating
2,600mA/hour, 12 volts DC

Product Features

* 3.3 Volt Processor Technology
* Processor Reset Button
* Resume Mode Provision
* Max-Time Power Management
* Advanced Power Management
* Flash BIOS Firmware
* QuickPort BallPoint Mouse
* PCMCIA Type III Slot (14.5mm)
* Kensington Cable Lock
* Password Security
* NiH_2 Battery

Please refer to the Appendices at the back of this booklet for a description of some of the features described above

Battery Release Procedure

The battery release procedure for the T1910 range is exactly the same as for the T1900. Please refer to the T1900 section for details on how to remove and install additional battery packs.

Upgrade Procedures

Memory Expansion Cards

The memory upgrade procedure for the T1910 range is exactly the same as for the T1900. Please refer to the T1900 section for details on how to install additional memory cards.

PCMCIA Cards

The PCMCIA card upgrade procedure for the T1910 range is exactly the same as for the T1900. Please refer to the T1900 section for details on how to install additional PCMCIA card options.

Setup Screen Layout

T1910 SETUP — BIOS version = x.xx

MEMORY		HARD DISK	
Total	= 4096KB	Capacity = 200MB	
Base	= 640KB		
Extended	= 3328KB	**POWER ON PASSWORD**	
Shadow BIOS ROM	= 128KB	Not Registered	
DISPLAY		**OTHERS**	
Display Adaptor	= VGA Compatible	Power-up Mode	= Boot
LCD Display Mode	= Color	CPU Cache	= Enabled
LCD Gray Scale Level	= Normal 64 Levels	Processing Speed	= High
		Battery Save Mode	= Automatic (Normal Life)
COM/PCMCIA/FDD/PRT		Popup	= Enabled
Serial Port	= COM1 (IRQ4/3F8H)	Speaker	= Enabled
PC Card Slot	= PCMCIA	Battery Alarm	= Enabled
External FDD/PRT	= Printer	Panel Power On/Off	= Disabled
Printer Port Type	= Output	Boot Priority	= FDD →HDD

↑↓←→: Select Items, Space, BkSp : Change values
Esc: Exit without saving, Home: Set default values, End: Save changes and exit

Note 1:- The option to change the **LCD Gray Scale Level** does not appear on the setup screen for the T1910CS.

Note 2:- The **Panel Power On/Off** option only appears when the machine is configured to power-up in **Resume Mode.**

Note 3:- In addition to this basic setup screen information, there are a number of pre-configured settings associated with the **Battery Save Mode** option. When selected, these settings affect the way the T1910/T1910CS manages its battery usage as follows:-

Automatic (Normal Life)		Automatic (Long Life)	
CPU Sleep Mode	= Disabled	CPU Sleep Mode	= Enabled
HDD Auto Off	= Disabled	HDD Auto Off	= 03Min.
Display Auto Off	= Disabled	Display Auto Off	= 03Min.
System Auto Off*	= Disabled	System Auto Off*	= 30Min.

* The **System Auto Off** option is offered only when the host system is configured for **Resume Mode** operation.

FN-Popup Window Layout

The T1910/T1910CS FN-Popup user status and configuration window allows the following information to be viewed and/or changed:-

Page One

Remaining Battery Capacity : E■■■■■■■F
LCD Gray Scale Level : Normal 64 Levels*
Power-up Mode : Resume Boot
Battery Save : Automatic (Normal Life)
Processing Speed : High Low

Page Two

Modem Power : On Off**
Panel Power On/Off : Enabled Disabled
Speaker : Enabled Disabled
Battery Alarm : Enabled Disabled

* The **LCD Gray Scale Level** option does not appear on the FN-Popup window for the T1910CS.
** The **Modem Power** option will only be displayed if the **PC Card Slot** option within the setup screen is set to **Others**.

Disassembly Procedures

Top Cover
The top cover disassembly procedure for the T1910 range is exactly the same as for the T1900 range. Please refer to the T1900 range section for details on how to remove and refit the top cover.

Keyboard
The keyboard disassembly procedure for the T1910 range is exactly the same as for the T1900 range. Please refer to the T1900 range section for details on how to remove and refit the keyboard.

Keyboard Base Plate and Backup Battery
The keyboard base plate and backup battery disassembly procedure for the T1910 range is exactly the same as for the T1900 range. Please refer to the T1900 range section for details on how to remove and refit the keyboard base plate and backup battery.

Hard Disk Drive
The hard disk drive disassembly procedure for the T1910 range is exactly the same as for the T1900 range. Please refer to the T1900 range section for details on how to remove and refit the hard disk drive.

System Board Cover Plate
The system board cover plate disassembly procedure for the T1910 range is exactly the same as for the T1900 range. Please refer to the T1900 range section for details on how to remove and refit the system board cover plate.

Display Unit
The display unit disassembly procedure for the T1910 range is exactly the same as for the T1900 range with the exception of the considerations as noted below. Please refer to the T1900 range section, in conjunction with the below stated notes, for details on how to remove and refit the display unit.

1) The DISPLAY SENSOR SWITCH CABLE is plugged into PJ6.
2) The DISPLAY CABLE is plugged into the SYSTEM BOARD via PJ9 and, for the T1910CS only, PJ8.

System Board
The system board disassembly procedure for the T1910 range is exactly the same as for the T1900 range with the exception of the consideration as noted below. Please refer to the T1900 range section, in conjunction with the below stated note, for details on how to remove and refit the display unit.

1) The SYSTEM BOARD is plugged into the POWER SUPPLY, PARALLEL AND SERIAL BOARD via PJ5 and PJ7.

Power Supply, Parallel and Serial Board
The power supply, parallel and serial board disassembly procedure for the T1910 range is exactly the same as for the T1900 range. Please refer to the T1900 range section for details on how to remove and refit the power supply, parallel and serial board.

Floppy Diskette Drive and Mouse/Keyboard Board
The floppy diskette drive and mouse/keyboard board disassembly procedure for the T1910 range is exactly the same as for the T1900 range. Please refer to the T1900 range section for details on how to remove and refit the floppy diskette drive and mouse/keyboard board.

Display Mask
The display mask disassembly procedure for the T1910 range is exactly the same as for the T1900 range. Please refer to the T1900 range section for details on how to remove and refit the display mask.

FL Inverter Board (T1910)
The FL inverter board disassembly procedure for the T1910 is exactly the same as for the T1900. Please refer to the T1900 section for details on how to remove and refit the FL inverter board.

FL Inverter Board (T1910CS)
The FL inverter board disassembly procedure for the T1910CS is exactly the same as for the T1900C with the exception of the consideration as noted below. Please refer to the T1900C section, in conjunction with the below stated note, for details on how to remove and refit the FL inverter board.

1) Cables are attached to the FL INVERTER via CN1 and CN2.

Display Module
The display module disassembly procedure for the T1910 range is exactly the same as for the T1900 range. Please refer to the T1900 range section for details on how to remove and refit the display module.

Real Mode Memory Map

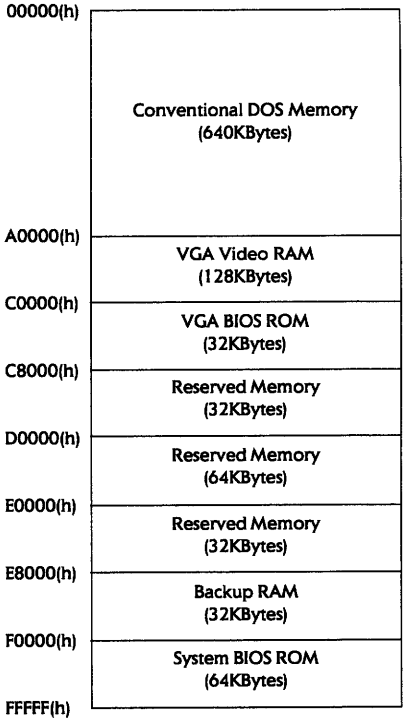

Interrupt Assignments

Interrupt Controller	Interrupt Level	Interrupt Assignment
-	NMI	RAM Parity Error, I/O Channel Error
1	0	Timer
	1	Keyboard
	2	Interrupt Controller for Levels 8 to 15
	3	COM2:
	4	COM1:
	5	Printer (LPT2:)
	6	Floppy Diskette Controller
	7	Printer (LPT1:)
2	8	Real Time Clock
	9	Software Redirect to INT 0A(h)
	10	Reserved
	11	Reserved
	12	PS/2 Mouse
	13	Math Co-Processor
	14	Hard Disk Controller
	15	Reserved

Direct Memory Access Assignments

The direct memory access assignments for the T1910 range are exactly the same as for the T1900 range. Please refer to the T1900 section for details on how direct memory access channels are assigned.

Input/Output Port Assignments

The input/output port assignments for the T1910 range are exactly the same as for the T1900 range. Please refer to the T1900 section for details on how input/output ports are assigned.

This page is intentionally left blank

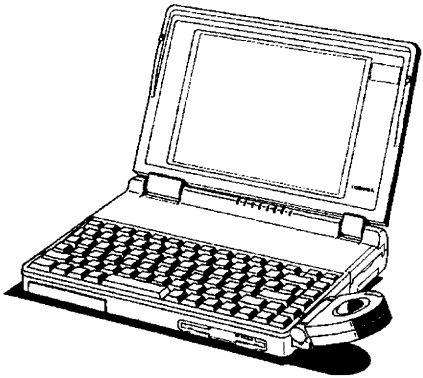

T1950 Notebook Range

Section Index

Product Specifications 118
Mains Adapter and Battery Specifications 118
Product Features 118
Battery Release Procedure 119
Upgrade Procedures 119
  Memory Expansion Cards 119
  PCMCIA Cards 119
Setup Screen Layout 119
FN-Popup Window Layout 120
Disassembly Procedures 120
  Top Cover 120
  Keyboard 120
  Keyboard Base Plate and Backup Battery 120
  Hard Disk Drive 120
  System Board Cover Plate 120
  Display Unit 120
  System Board 121
  Power Supply, Parallel and Serial Board 121
  Floppy Diskette Drive and Mouse/Keyboard Board . . . 121
  Display Mask 121
  FL Inverter Board (T1950CS) 121
  Display Module (T1950CS) 121
  FL Inverter Board (T1950CT) 122
  Display Module and Display Cable Board (T1950CT) . . . 123
Real Mode Memory Map 124
Interrupt Assignments 124
Direct Memory Access Assignments 124
Input/Output Port Assignments 124

T1950 Notebook Range

Product Specifications

	T1950CS	T1950CT
Processor	i80486DX/2	i80486DX/2
Clock Speed	40MHz	40MHz
Standard Memory	4MBytes	4MBytes
Maximum Memory	20MBytes	20MBytes
Hard Disk Drive	200Mb	200/320Mb
Floppy Diskette Drive	1.44MBytes	1.44MBytes
Display Type	ASTN Colour	TFT Colour
Display Resolution	VGA	VGA/S-VGA
Display Colour Palette	256 Colours	256 Colours
Internal Modem Slot	Yes (PCMCIA)	Yes (PCMCIA)
Serial Port	Yes	Yes
Parallel Port	Yes	Yes
Monitor Port	Yes	Yes
PS/2 Mouse Port	Yes	Yes
PS/2 Keyboard Port	Yes	Yes
Keyboard Type	84-Keys	84-Keys
DeskStation Expansion	None	None
Maximum Battery Life	3.5 Hours	4 Hours
Weight (kg/lb)	3.2/6.9	3.2/6.9

Mains Adapter and Battery Specifications

Mains Adapter
Toshiba Part Number PA2478U
Output Rating 18 volts, 1.7 amps

Battery Pack
Toshiba Part Number PA2420U
Power Rating
2,400mA/hour, 12 volts DC

Product Features

* 3.3 Volt Processor Technology
* Processor Reset Button
* Resume Mode Provision
* Hard-RAM Provision (T1950CT Only)
* Max-Time Power Management
* Advanced Power Management
* VESA Local Bus Graphics (T1950CT Only)
* BitBlk Graphics Accelerator (T1950CT Only)
* QuickPort BallPoint Mouse
* 800x600x256 External S-VGA (T1950CT Only)
* 1024x768x256 External S-VGA (T1950CT Only)
* PCMCIA Type III Slot (14.5mm)
* Kensington Cable Lock
* Password Security
* NiH_2 Battery
* Flash BIOS Firmware

Please refer to the Appendices at the back of this booklet for a description of some of the features described above

Battery Release Procedure

The battery release procedure for the T1950 range is exactly the same as for the T1900. Please refer to the T1900 section for details on how to remove and install additional battery packs.

Upgrade Procedures

Memory Expansion Cards

The memory upgrade procedure for the T1950 range is exactly the same as for the T1900. Please refer to the T1900 section for details on how to install additional memory cards.

PCMCIA Cards

The PCMCIA card upgrade procedure for the T1950 range is exactly the same as for the T1900. Please refer to the T1900 section for details on how to install additional PCMCIA card options.

Setup Screen Layout

T1950CS SETUP — BIOS version = x.xx

MEMORY		HARD DISK	
Total	= 4096KB	Capacity = 200MB	
Base	= 640KB		
Extended	= 3328KB	**POWER ON PASSWORD**	
Shadow BIOS ROM	= 128KB	Not Registered	
DISPLAY		**OTHERS**	
Display Adaptor	= VGA Compatible	Power-up Mode	= Boot
LCD Display Mode	= Color	CPU Cache	= Enabled
		Processing Speed	= High
		Battery Save Mode	= Automatic (Normal Life)
COM/PCMCIA/FDD/PRT		Popup	= Enabled
Serial Port	= COM1 (IRQ4/3F8H)	Speaker	= Enabled
PC Card Slot	= PCMCIA	Battery Alarm	= Enabled
External FDD/PRT	= Printer	Panel Power On/Off	= Disabled
Printer Port Type	= Output	Boot Priority	= FDD →HDD

↑↓←→: Select Items, Space, BkSp : Change values

Esc: Exit without saving, Home: Set default values, End: Save changes and exit

Note 1:- The T1950CT has two additional options contained under the **DISPLAY** section as follows:-

DISPLAY	
Display Adaptor	= VGA Compatible
LCD Display Mode	= Color
LCD Display Colors	= 180K Colors
Power On Display	= Internal/External

Note 2:- The **Panel Power On/Off** option only appears when the machine is configured to power-up in **Resume Mode.**

Note 3:- In addition to this basic setup screen information, there are a number of pre-configured settings associated with the **Battery Save Mode** option. When selected, these settings affect the way the T1950CS/T1950CT manage their battery usage as follows:-

Automatic (Normal Life)		Automatic (Long Life)	
CPU Sleep Mode	= Disabled	CPU Sleep Mode	= Enabled
HDD Auto Off	= Disabled	HDD Auto Off	= 03Min.
Display Auto Off	= Disabled	Display Auto Off	= 03Min.
System Auto Off*	= Disabled	System Auto Off*	= 30Min.

* The **System Auto Off** option is offered only when the host system is configured for **Resume Mode** operation.

FN-Popup Window Layout

The T1950CS/T1950CT FN-Popup user status and configuration window allows the following information to be viewed and/or changed:-

Page One

Remaining Battery Capacity : E■■■■■■■F

Power-up Mode : Resume Boot
Battery Save : Automatic (Normal Life)
Processing Speed : High Low

Page Two

Modem Power : On Off*
Panel Power On/Off : Enabled Disabled
Speaker : Enabled Disabled
Battery Alarm : Enabled Disabled

* The **Modem Power** option will only be displayed if the **PC Card Slot** option within the setup screen is set to **Others**.

Disassembly Procedures

Top Cover

The top cover disassembly procedure for the T1950 range is exactly the same as for the T1900 range. Please refer to the T1900 range section for details on how to remove and refit the top cover.

Keyboard

The keyboard disassembly procedure for the T1950 range is exactly the same as for the T1900 range. Please refer to the T1900 range section for details on how to remove and refit the keyboard.

Keyboard Base Plate and Backup Battery

The keyboard base plate and backup battery disassembly procedure for the T1950 range is exactly the same as for the T1900 range. Please refer to the T1900 range section for details on how to remove and refit the keyboard base plate and backup battery.

Hard Disk Drive

The hard disk drive disassembly procedure for the T1950 range is exactly the same as for the T1900 range. Please refer to the T1900 range section for details on how to remove and refit the hard disk drive.

System Board Cover Plate

The system board cover plate disassembly procedure for the T1950 range is exactly the same as for the T1900 range. Please refer to the T1900 range section for details on how to remove and refit the system board cover plate.

Display Unit

The display unit disassembly procedure for the T1950 range is exactly the same as for the T1900C with the exception of the considerations as noted below. Please refer to the T1900C section, in conjunction with the below stated notes, for details on how to remove and refit the display unit.

1) The DISPLAY SENSOR SWITCH CABLE is plugged into PJ6.
2) The DISPLAY CABLE is plugged into the SYSTEM BOARD via PJ8 and PJ9.

System Board
The system board disassembly procedure for the T1950 range is exactly the same as for the T1900 range with the exception of the consideration as noted below. Please refer to the T1900 range section, in conjunction with the below stated note, for details on how to remove and refit the display unit.

1) The SYSTEM BOARD is plugged into the POWER SUPPLY, PARALLEL AND SERIAL BOARD via PJ5 and PJ7.

Power Supply, Parallel and Serial Board
The power supply, parallel and serial board disassembly procedure for the T1950 range is exactly the same as for the T1900 range. Please refer to the T1900 range section for details on how to remove and refit the power supply, parallel and serial board.

Floppy Diskette Drive and Mouse/Keyboard Board
The floppy diskette drive and mouse/keyboard board disassembly procedure for the T1950 range is exactly the same as for the T1900 range. Please refer to the T1900 range section for details on how to remove and refit the floppy diskette drive and mouse/keyboard board.

Display Mask
The display mask disassembly procedure for the T1950 range is exactly the same as for the T1900 range. Please refer to the T1900 range section for details on how to remove and refit the display mask.

FL Inverter Board (T1950CS)
The FL inverter board disassembly procedure for the T1950CS is exactly the same as for the T1900C. Please refer to the T1900 section for details on how to remove and refit the FL inverter board.

Display Module (T1950CS)
The display module disassembly procedure for the T1950CS is exactly the same as for the T1900C. Please refer to the T1900C section for details on how to remove and refit the display module.

FL Inverter Board (T1950CT)

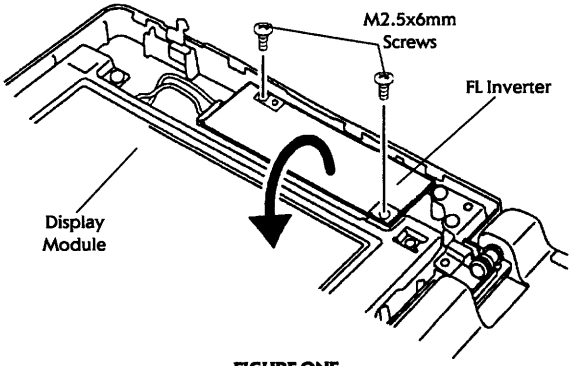

FIGURE ONE

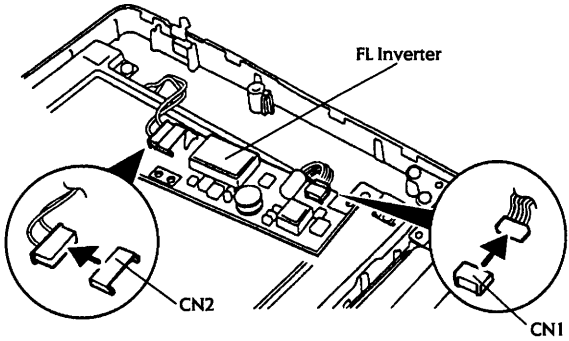

FIGURE TWO

1) Switch the T1950CT off and disconnect all interconnecting cables including the mains adapter.
2) Remove the BATTERY PACK as described earlier in this section.
3) Follow all instructions as detailed under the disassembly procedure **Display Mask** before proceeding.
4) Remove the two screws (M2.5x6mm) securing the FL INVERTER to the DISPLAY UNIT and carefully pivot it towards the DISPLAY MODULE (FIGURE ONE).
5) Disconnect the FL INVERTER cables from CN1 and CN2 and remove the FL INVERTER (FIGURE TWO).
8) Refit the FL INVERTER in reverse order.

Display Module and Display Cable Board (T1950CT)

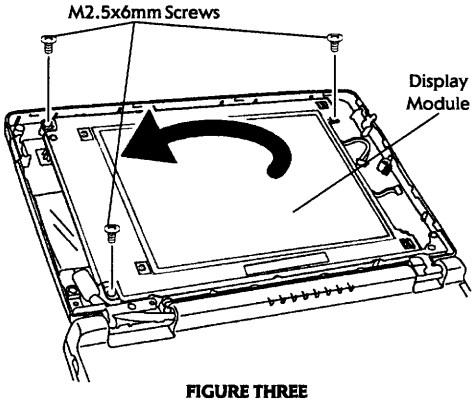

FIGURE THREE

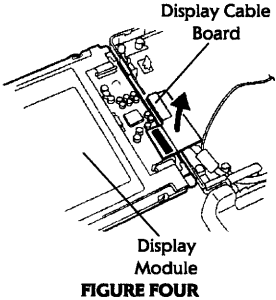

FIGURE FOUR

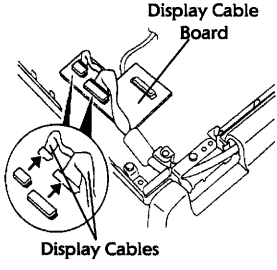

FIGURE FIVE

1) Switch the T1950CT off and disconnect all interconnecting cables including the mains adapter.
2) Remove the BATTERY PACK as described earlier in this section.
3) Follow all instructions as detailed under the disassembly procedures **Display Mask** and **FL Inverter Board (T1950CT)** before proceeding.
4) Push the DISPLAY UNIT back until it is lying flat.
5) Remove the three screws (M2.5x6mm) securing the DISPLAY MODULE to the DISPLAY UNIT, noting that one screw also secures a grounding wire, and carefully pivot the DISPLAY MODULE over to lie on the left hand side of the DISPLAY UNIT (FIGURE THREE).
6) Carefully disconnect the DISPLAY CABLE BOARD from the DISPLAY MODULE and set the DISPLAY MODULE aside (FIGURE FOUR).
7) Disconnect the DISPLAY CABLES from the DISPLAY CABLE BOARD and remove it from the DISPLAY UNIT (FIGURE FIVE).
8) Refit the DISPLAY CABLE BOARD and DISPLAY MODULE in reverse order taking care to ensure that the DISPLAY CABLES do not become trapped in any way and that the grounding wire is correctly attached.

Real Mode Memory Map

The real mode memory map for the T1950 range is exactly the same as for the T1910 range. Please refer to the T1910 section for details on how the system's real mode memory map is laid out.

Interrupt Assignments

The interrupt assignments for the T1950 range are exactly the same as for the T1910 range. Please refer to the T1910 section for details on how interrupts are assigned.

Direct Memory Access Assignments

The direct memory access assignments for the T1950 range are exactly the same as for the T1900 range. Please refer to the T1900 section for details on how direct memory access channels are assigned.

Input/Output Port Assignments

The input/output port assignments for the T1950 range are exactly the same as for the T1900 range. Please refer to the T1900 section for details on how input/output ports are assigned.

T2100
Range

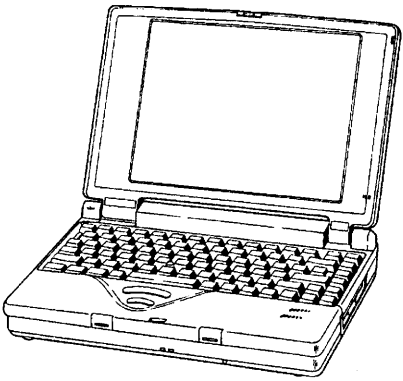

T2100 Notebook Range

Section Index

Product Specifications 126
Battery Specifications 126
Product Features 126
Battery Release Procedure 127
Upgrade Procedures 128
  Memory Expansion Cards 128
  PCMCIA Cards 129
Setup Screen Layout 130
FN-HotKey Functions 131
Disassembly Procedures 133
  Keyboard 133
  Hard Disk Drive 134
  Top Cover Assembly 136
  Floppy Diskette Drive 138
  AC Power Supply Unit 139
  System Board, Backup Battery and RTC Battery . . . 140
  Display Mask 141
  FL Inverter and Contrast Board (T2100 and T2100CS) . . 142
  Display Module (T2100) 143
  Display Module (T2100CS) 144
  FL Inverter (T2100CT) 145
  Display Module (T2100CT) 146
Real Mode Memory Map 147
Interrupt Assignments 148
Direct Memory Access Assignments 148
Input/Output Port Assignments 149

T2100 Notebook Range

Product Specifications

	T2100	T2100CS	T2100CT
Processor	i80486DX/2	i80486DX/2	i80486DX/2
Clock Speed	50MHz	50MHz	50MHz
Standard Memory	4MBytes	4MBytes	8MBytes
Maximum Memory	28MBytes	28MBytes	32MBytes
Hard Disk Drive	260 Million Bytes	350 Million Bytes	350 Million Bytes
Floppy Diskette Drive	1.44MBytes	1.44MBytes	1.44MBytes
Display Type	ASTN Mono	ASTN Colour	TFT Colour
Display Resolution	VGA/S-VGA	VGA/S-VGA	VGA/S-VGA
Display Colour Palette	64 Grey Scales	256 Colours	65,536 Colours
Internal Modem Slot	Yes (PCMCIA)	Yes (PCMCIA)	Yes (PCMCIA)
Serial Port	Yes	Yes	Yes
Enhanced Parallel Port	Yes	Yes	Yes
Monitor Port	Yes	Yes	Yes
PS/2 Mouse Port	No	No	No
PS/2 Keyboard Port	Yes	Yes	Yes
Keyboard Type	84-Keys	84-Keys	84-Keys
DeskStation Expansion	Port Replicator Only	Port Replicator Only	Port Replicator Only
Maximum Battery Life	4 Hours	4 Hours	3.5 Hours
Weight (kg/lb)	3.0/6.6	3.1/6.8	3.1/6.8

Battery Specifications

Toshiba Part Number PA2437U-Y
Power Rating 2,600mA/hour, 12 volts DC

Product Features

* 3.3 Volt Processor Technology
* Processor Reset Button
* Resume Mode Provision
* Max-Time Power Management
* Advanced Power Management
* VESA Local Bus Graphics
* BitBlk Graphics Accelerator
* Multipurpose PCMCIA Slot (2 x Type II / 1 x Type III)
* AccuPoint Mouse
* 800x600x256 External S-VGA
* 1024x768x256 External S-VGA
* 65,536 Onscreen Colours (T2100CT Only)
* Kensington Cable Lock
* HotLock Security
* NiH_2 Battery
* Flash BIOS Firmware

Please refer to the Appendices at the back of this booklet for a description of some of the features described above

Battery Release Procedure

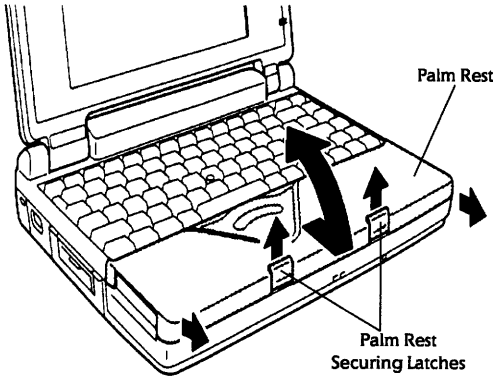

FIGURE ONE

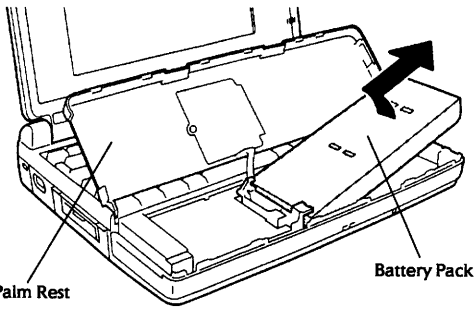

FIGURE TWO

1) Switch the T2100 off and disconnect all interconnecting cables including the mains lead.
2) Turn the T2100 around so its front edge is towards you and open the screen.
3) Release the two PALM REST SECURING LATCHES by sliding them vertically upwards (FIGURE ONE).
4) Slide the PALM REST towards the front of the system unit to release it then pivot it backwards to rest above the KEYBOARD (FIGURE ONE).
5) Using the clear plastic pull tag on the right hand side of the battery compartment, partially lift the BATTERY PACK and remove it from the system unit (FIGURE TWO).
6) Refit the BATTERY PACK in reverse order ensuring that the PALM REST SECURING LATCHES are set in the locked position (down).

Memory Expansion Cards

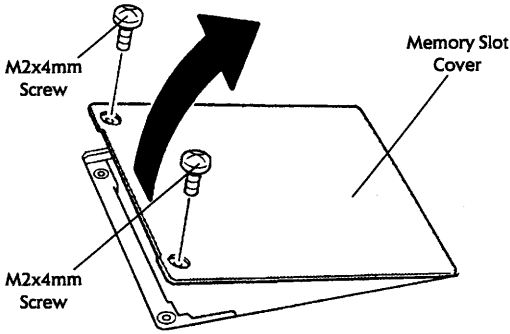

FIGURE ONE

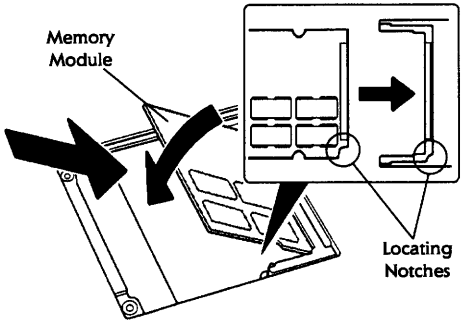

FIGURE TWO

1) Ensure the T2100 is configured to start in Boot Mode.
2) Switch the T2100 off and disconnect all interconnecting cables including the mains lead.
3) Turn the T2100 upside down and place it on a flat surface.
4) Remove the two screws (M2x4mm) securing the MEMORY SLOT COVER and lift the cover off (FIGURE ONE).
5) Insert the MEMORY MODULE into the memory slot ensuring that it is seated correctly according to the LOCATING NOTCHES on both the card and the system unit (FIGURE TWO).
6) Replace and secure the MEMORY SLOT COVER.
7) Turn on the T2100. The system will automatically recognise the additional memory during the boot sequence.

CAUTION **Do not touch the connecting edge of the memory module as debris, oil or grease in or on this connector may cause memory access problems.**

PCMCIA Cards

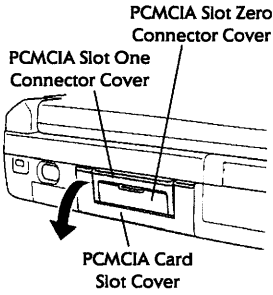

FIGURE ONE

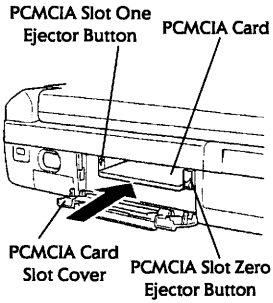

FIGURE TWO

1) Ensure the T2100 is configured to start in Boot Mode.
2) Switch the T2100 off and disconnect all interconnecting cables including the mains lead.
3) Turn the T2100 around so that its left hand side is towards you.
4) Open the PCMCIA CARD SLOT COVER (FIGURE ONE).
5) Insert the PCMCIA CARD ensuring that it is oriented correctly (FIGURE TWO).

Note:- If you are installing either a Type I (3.3mm) or a Type II (5.0mm) PCMCIA CARD you may insert it into either Slot Zero or Slot One. If you are installing a Type III (10.5mm) PCMCIA CARD you may only insert it into Slot Zero.

5a) To remove the PCMCIA CARD press either the PCMCIA SLOT ZERO EJECTOR BUTTON or the PCMCIA SLOT ONE EJECTOR BUTTON (FIGURE TWO). The PCMCIA CARD will be partially ejected from the system allowing it to be grasped and completely removed.
7) If the PCMCIA CARD requires an external interface, open either the PCMCIA SLOT ZERO CONNECTOR COVER or the PCMCIA SLOT ONE CONNECTOR COVER within the PCMCIA CARD SLOT COVER as needed (FIGURE ONE).
8) Close the PCMCIA CARD SLOT COVER.
9) Turn on the T2100. If required you may need to configure the PCMCIA card to operate correctly - refer to the manufacturer's documentation for details on how to achieve this.

CAUTION **Do not touch the connecting edge of the PCMCIA card as debris, oil or grease in or on this connector may cause access problems.**

Setup Screen Layout

T2100 (Monochrome Version) and T2100CS (ASTN Colour Version)

SYSTEM SETUP — BIOS version = x.xx

MEMORY		**I/O PORTS**	
Total	= 4096KB	Serial Port	= COM1(IRQ4/3F8H)
Base	= 640KB	Parallel Port	= LPT1(378H)
Extended	= 3264KB		
Shadow BIOS ROM	= 192KB	**PASSWORD**	
		Not Registered	
DISPLAY			
Display Adaptor	= VGA Compatible	**OTHERS**	
LCD Display Mode	= Color	Power-up Mode	= Boot
		CPU Cache	= Enabled
LCD Gray Scale Level	= Normal 64 Levels	Processing Speed	= High
Power On Display	= Internal/External	Speaker Volume	= High
Text Mode Stretch	= Enabled	Panel Power On/Off	= Disabled
		Alarm Power On	= Disabled
BATTERY		Keyboard	= Layout/Fn
Battery Save Mode	= Full Power	Pointing Devices	= Auto-Selected
Battery Level	= E■■■■■■■F	Boot Priority	= FDD →HDD
HARD DISK			
HDD Mode	= Enhanced IDE(Normal)		

↑↓←→: Select Items, Space, BkSp : Change values
Esc: Exit without saving, Home: Set default values, End: Save changes and exit

Note 1:- The T2100CS (ASTN colour version) has different options contained under the **DISPLAY** section as follows:-

DISPLAY	
Display Adaptor	= VGA Compatible
LCD Display Mode	= Color
Ext. Scan Mode	= Interlace
LCD Display Colors	= 222K Colors
Power On Display	= Internal/External
Text Mode Stretch	= Enabled

Note 2:- The **Panel Power On/Off** option only appears when the machine is configured to power-up in **Resume Mode**.

Note 3:- In addition to this basic setup screen information, there are a number of pre-configured settings associated with the **Battery Save Mode** option. When selected, these settings affect the way that both the T2100 and the T2100CS manage their battery usage as follows:-

Low Power		**Full Power**	
CPU Sleep Mode	= Enabled	CPU Sleep Mode	= Disabled
Display Auto Off	= 03Min.	Display Auto Off	= Disabled
HDD Auto Off	= 03Min.	HDD Auto Off	= Disabled
System Auto Off*	= 30Min.	System Auto Off*	= Disabled
LCD Brightness	= Semi-Bright	LCD Brightness	= Bright

* The **System Auto Off** option is offered only when the host system is configured for **Resume Mode** operation.

T2100CT (TFT Colour Version)

SYSTEM SETUP — BIOS version = x.xx

MEMORY		I/O PORTS	
Total	= 8192KB	Serial Port	= COM1(IRQ4/3F8H)
Base	= 640KB	Parallel Port	= LPT1(378H)
Extended	= 7360KB		
Shadow BIOS ROM	= 192KB	**PASSWORD**	
		Not Registered	
DISPLAY			
Display Adaptor	= VGA Compatible	**OTHERS**	
LCD Display Mode	= Color	Power-up Mode	= Boot
Ext. Scan Mode	= Interlace	CPU Cache	= Enabled
LCD Display Colors	= 256K Colors	Processing Speed	= High
Power On Display	= Internal/External	Speaker Volume	= High
Text Mode Stretch	= Enabled	Panel Power On/Off	= Disabled
		Alarm Power On	= Disabled
BATTERY		Keyboard	= Layout/Fn
Battery Save Mode	= Full Power	Pointing Devices	= Auto-Selected
Battery Level	= ■■■■■■■F	Boot Priority	= FDD → HDD
HARD DISK			
HDD Mode	= Enhanced IDE(Normal)		

↑↓←→: Select items, Space, BkSp : Change values
Esc: Exit without saving, Home: Set default values, End: Save changes and exit

Note 1:- The **Panel Power On/Off** option only appears when the machine is configured to power-up in **Resume Mode.**

Note 2:- In addition to this basic setup screen information, there are a number of pre-configured settings associated with the **Battery Save Mode** option. When selected, these settings affect the way the T2100CT manages its battery usage as follows:-

Low Power		Full Power	
CPU Sleep Mode	= Enabled	CPU Sleep Mode	= Disabled
Display Auto Off	= 03Min.	Display Auto Off	= 30Min.
HDD Auto Off	= 03Min.	HDD Auto Off	= Disabled
System Auto Off*	= 30Min.	System Auto Off*	= Disabled
LCD Brightness	= Semi-Bright	LCD Brightness	= Bright

* The **System Auto Off** option is offered only when the host system is configured for **Resume Mode** operation.

FN-HotKey Functions

The T2100 FN-HotKey functions allow the following configuration and setup changes to be made "on-the-fly":-

(FN + F1) - Instant Security

This HotKey combination will blank the T2100's display and lock all access to the keyboard until the correct password, as defined within the setup screen, is entered.

(FN + F2) - Power Save Mode

This HotKey combination will toggle between the T2100's two pre-defined power usage settings, low power and full power, and the user's own power usage configuration.

/continued/

(FN + F3) - Resume/Boot Mode

This HotKey combination will toggle between Resume Mode and standard Boot mode.

(FN + F4) - Speaker Volume

This HotKey combination will toggle the T2100's internal speaker between its disabled, high, medium and low settings.

(FN + F5) - Select Active Display

This HotKey combination will toggle the T2100 between displaying the video image on the internal/external monitor or both monitors simultaneously.

(FN + F6) - Select Video Mode

This HotKey combination will toggle the monochrome version of the T2100 between its normal and reverse video modes. This HotKey function is not available on the T2100CS or the T2100CT.

(FN + F10) - Select Cursor Mode

This HotKey combination activates the T2100's overlaid numeric keypad to operate as if it were a cursor pad.

(FN + F11) - Select Numeric Mode

This HotKey combination activates the T2100's overlaid numeric keypad to operate in its native numeric mode.

(FN + F12) - Scroll Lock Mode

This HotKey combination toggles Scroll Lock on and off.

Keyboard

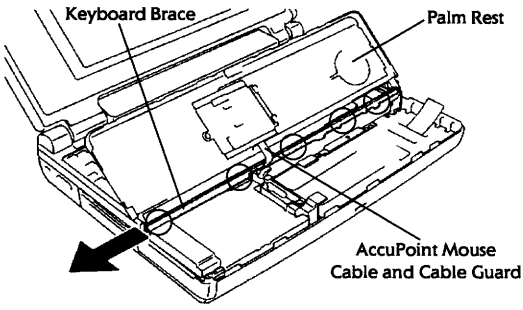

FIGURE ONE

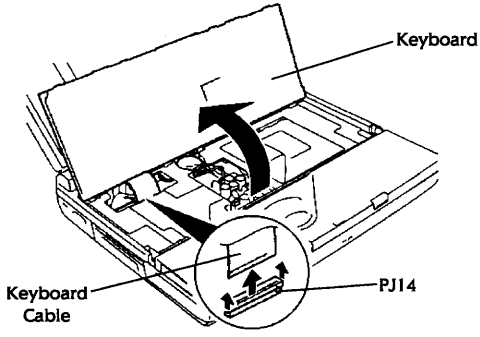

FIGURE TWO

1) Switch the T2100 off and disconnect all interconnecting cables including the mains lead.
2) Remove the BATTERY PACK as described earlier in this section.
3) Should they be installed, remove any PCMCIA cards and/or MEMORY CARDS as described earlier in this section.
4) Ensure the front edge of the T2100 is towards you and the PALM REST is in the open position (FIGURE ONE).
5) Carefully release the five latches (circled) securing the KEYBOARD BRACE and remove it by sliding it towards the left of the system unit. Take extreme care that you do not damage the ACCUPOINT MOUSE CABLE AND CABLE GUARD during this procedure (FIGURE ONE).
6) Close the PALM REST, lift the KEYBOARD out of the system unit and pivot it backwards to lie against the display assembly (FIGURE TWO).
7) Carefully release the locking pegs on ZIF connector PJ14, withdraw the KEYBOARD CABLE from within it and remove the KEYBOARD from the system (FIGURE TWO).
8) Refit the KEYBOARD in reverse order ensuring that the KEYBOARD BRACE is located behind the ACCUPOINT MOUSE CABLE AND CABLE GUARD and that its latches are securely locked in place.

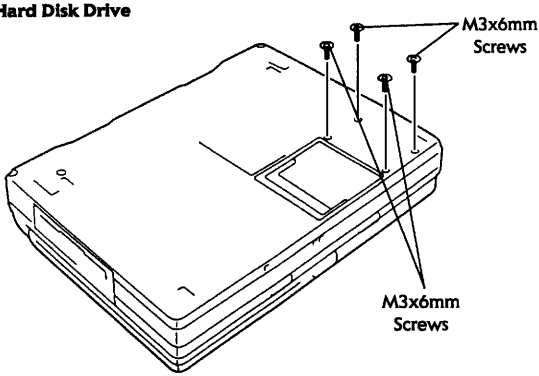

FIGURE THREE

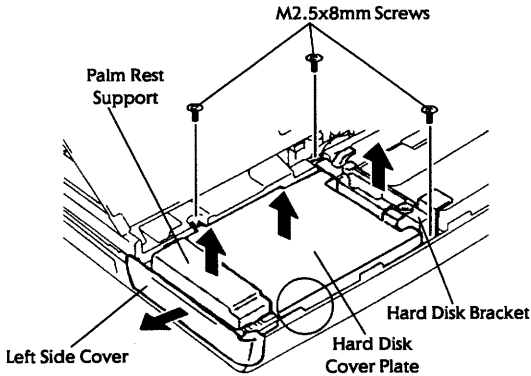

FIGURE FOUR

1) Switch the T2100 off and disconnect all interconnecting cables including the mains lead.
2) Remove the BATTERY PACK as described earlier in this section.
3) Should they be installed, remove any PCMCIA cards and/or MEMORY CARDS as described earlier in this section.
4) Follow all instructions as detailed under the disassembly procedure **Keyboard** before proceeding.
5) Close the PALM REST and screen, turn the T2100 upside down, place it on a flat surface and remove the four screws (M3x6mm) securing the HARD DISK DRIVE (FIGURE THREE).
6) Turn the T2100 the right way up and open the screen and PALM REST.
7) Carefully release the locking pegs on ZIF connector PJ13 and withdraw the ACCUPOINT MOUSE CABLE from within it.
8) Carefully unlatch the PALM REST from the left and right hand sides of the system unit and remove it.

/continued/

Hard Disk Drive (continued)

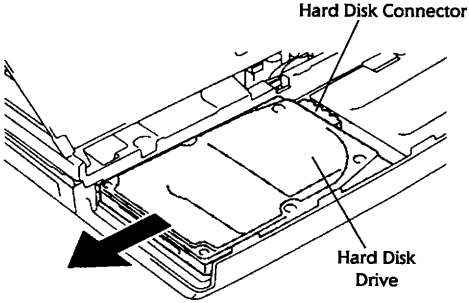

FIGURE FIVE

9) Carefully release the latches on the front and back edges of the PALM REST SUPPORT and lift it away from the system unit (FIGURE FOUR overleaf).
10) Release the latches on the front and back edges of the LEFT SIDE COVER and remove it from the system unit (FIGURE FOUR overleaf).
11) Remove the three screws (M2.5x8mm) securing the HARD DISK BRACKET and the HARD DISK COVER PLATE (FIGURE FOUR overleaf).
12) Lift the HARD DISK BRACKET vertically out of the system unit (FIGURE FOUR overleaf).
13) Carefully lift the HARD DISK COVER PLATE out of the system unit noting the single latch (circled) securing its front edge (FIGURE FOUR overleaf).
14) Slide the HARD DISK DRIVE towards the left to release it from the HARD DISK CONNECTOR and lift it out of the system unit (FIGURE FIVE).
15) Refit the HARD DISK DRIVE in reverse order.

Top Cover Assembly

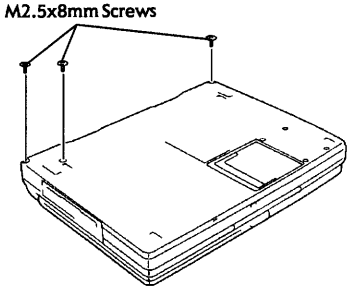

FIGURE SIX

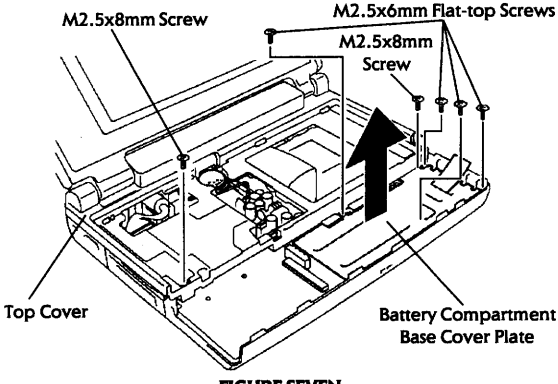

FIGURE SEVEN

1) Switch the T2100 off and disconnect all interconnecting cables including the mains lead.
2) Remove the BATTERY PACK as described earlier in this section.
3) Should they be installed, remove any PCMCIA cards and/or MEMORY CARDS as described earlier in this section.
4) Follow all instructions as detailed under the disassembly procedures **Keyboard** and **Hard Disk Drive** before proceeding.
5) Close the screen, turn the T2100 upside down, place it on a flat surface and remove the three screws (M2.5x8mm) securing the TOP COVER to the bottom cover (FIGURE SIX).
6) Turn the T2100 the right way up, open the screen to a vertical position and lift up the black plastic cover within the battery compartment to expose the BATTERY COMPARTMENT BASE COVER PLATE beneath (FIGURE SEVEN).
7) Remove the four screws (M2.5x6mm Flat-top) securing the BATTERY COMPARTMENT BASE COVER PLATE and lift it out of the system unit (FIGURE SEVEN).
8) Remove the two screws (M2.5x8mm) securing the TOP COVER (FIGURE SEVEN).

/continued/

Top Cover Assembly (continued)

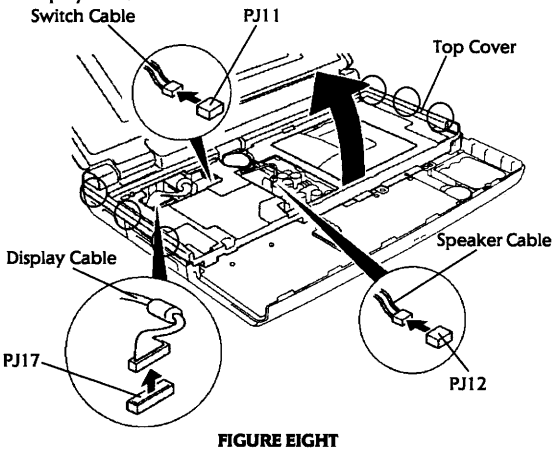

FIGURE EIGHT

9) If present, peel back any tape covering either the DISPLAY SENSOR SWITCH CABLE and/or the DISPLAY CABLE (FIGURE EIGHT).
10) Carefully unplug the DISPLAY SENSOR SWITCH CABLE from PJ11 (FIGURE EIGHT).
11) Carefully unplug the SPEAKER CABLE from PJ12 (FIGURE EIGHT).
12) Carefully unplug the DISPLAY CABLE from PJ17 noting how the cable choke is located within its plastic housing on the TOP COVER assembly (FIGURE EIGHT).
13) Carefully release the six latches (circled) which secure the TOP COVER at it left and right hand edges and the three latches which secure its back edge, and lift it away from the bottom cover assembly noting that it may be partially restrained by the DISPLAY CABLE choke (FIGURE EIGHT).
14) Refit the TOP COVER assembly in reverse order ensuring that (a) the DISPLAY CABLE choke is correctly secured within it housing, and (b) the clear plastic pull tag for the battery is positioned on top of the black plastic sheet that covers the BATTERY COMPARTMENT BASE COVER PLATE.

Floppy Diskette Drive

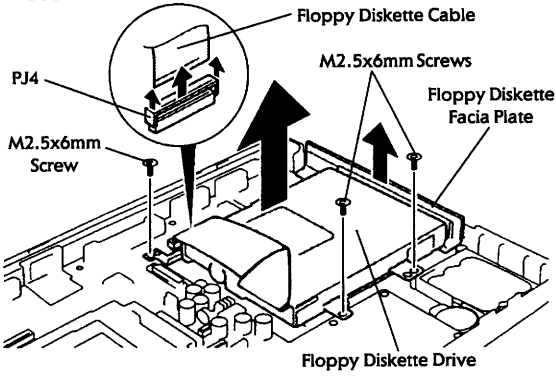

FIGURE NINE

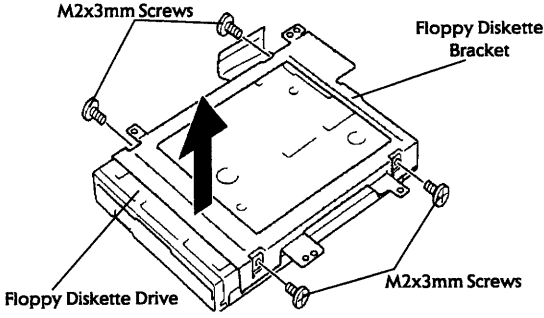

FIGURE TEN

1) Switch the T2100 off and disconnect all interconnecting cables including the mains lead.
2) Remove the BATTERY PACK as described earlier in this section.
3) Should they be installed, remove any PCMCIA cards and/or MEMORY CARDS as described earlier in this section.
4) Follow all instructions as detailed under the disassembly procedures **Keyboard, Hard Disk Drive** and **Top Cover Assembly** before proceeding.
5) Carefully release the locking pegs on ZIF connector PJ4 and withdraw the FLOPPY DISKETTE CABLE from within it (FIGURE NINE).
6) Remove the three screws (M2.5x6mm) securing the FLOPPY DISKETTE DRIVE assembly (FIGURE NINE).
7) Lift the FLOPPY DISKETTE DRIVE and FLOPPY DISKETTE FACIA PLATE out of the system unit (FIGURE NINE).
8) Remove the four screws (M2x3mm) securing the FLOPPY DISKETTE BRACKET to the FLOPPY DISKETTE DRIVE and remove the FLOPPY DISKETTE DRIVE from it (FIGURE TEN).
9) Refit the FLOPPY DISKETTE DRIVE in reverse order.

AC Power Supply Unit

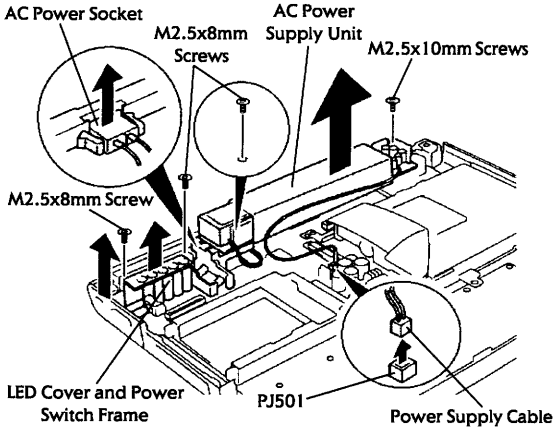

FIGURE ELEVEN

1) Switch the T2100 off and disconnect all interconnecting cables including the mains lead.
2) Remove the BATTERY PACK as described earlier in this section.
3) Should they be installed, remove any PCMCIA cards and/or MEMORY CARDS as described earlier in this section.
4) Follow all instructions as detailed under the disassembly procedures **Keyboard, Hard Disk Drive** and **Top Cover Assembly** before proceeding.
5) Unplug the POWER SUPPLY CABLE from PJ501 on the SYSTEM BOARD (FIGURE ELEVEN).
6) Remove the screw (M2.5x10mm) securing the AC POWER SUPPLY UNIT and pivot it forward to fully expose the LED COVER AND POWER SWITCH FRAME (FIGURE ELEVEN).

   Note:- The AC POWER SUPPLY UNIT may be additionally secured by tape and/or sticky pads. If this is the case this will need to be released and/or removed before this procedure can be completed.

7) Remove the three screws (M2.5x8mm) securing the LED COVER AND POWER SWITCH FRAME and remove it, together with the power switch, from the system unit (FIGURE ELEVEN).
8) Slide the AC POWER SOCKET vertically out from the rear panel and remove the AC POWER SUPPLY UNIT from the system unit (FIGURE ELEVEN).
9) Refit the AC POWER SUPPLY UNIT in reverse order ensuring that the power switch is seated correctly within the LED COVER AND POWER SWITCH FRAME.

System Board, RTC Battery and Backup Battery

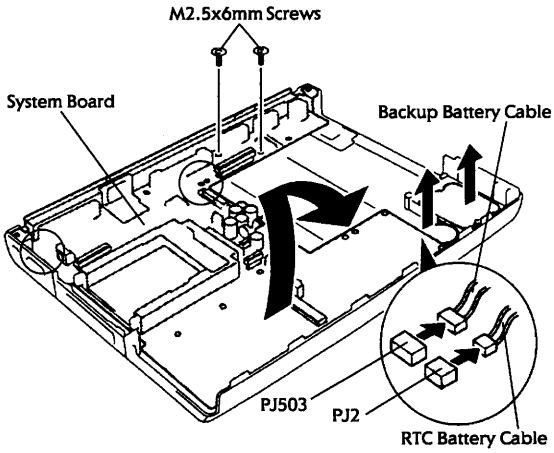

FIGURE TWELVE

1) Switch the T2100 off and disconnect all interconnecting cables including the mains lead.
2) Remove the BATTERY PACK as described earlier in this section.
3) Should they be installed, remove any PCMCIA cards and/or MEMORY CARDS as described earlier in this section.
4) Follow all instructions as detailed under the disassembly procedures **Keyboard, Hard Disk Drive, Top Cover Assembly, Floppy Diskette Drive** and **AC Power Supply Unit** before proceeding.
5) Remove the two screws (M2.5x6mm) securing the SYSTEM BOARD (FIGURE TWELVE).
6) Lift the front edge of the SYSTEM BOARD so that it clears the two plastic locating lugs (circled) on the bottom cover and the remove it from the system unit (FIGURE TWELVE).

   Note:- Take extreme care during this procedure as you may find the rear edge of the SYSTEM BOARD becomes caught on the clear plastic/metal sheet which lines the bottom of the bottom cover assembly.

7) Unplug the RTC BATTERY from PJ2 on the underside of the SYSTEM BOARD (FIGURE TWELVE).
8) Unplug the BACKUP BATTERY from PJ503 on the underside of the SYSTEM BOARD (FIGURE TWELVE).
9) Refit the BACKUP BATTERY, RTC BATTERY and SYSTEM BOARD in reverse order.

Display Mask

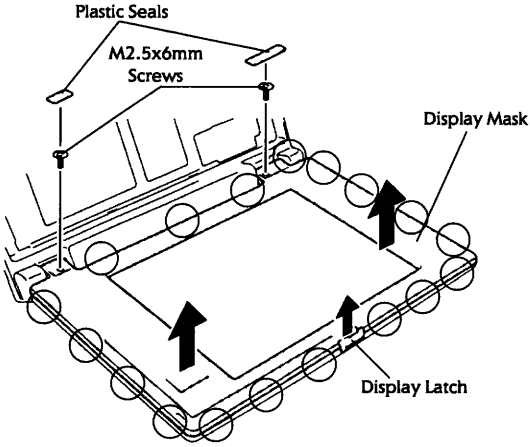

FIGURE THIRTEEN

1) Switch the T2100 off and disconnect all interconnecting cables including the mains lead.
2) Remove the BATTERY PACK as described earlier in this section.
3) Remove the two PLASTIC SEALS from the left and right hinge arms of the DISPLAY MASK and remove the two screws (M2.5x6mm) hidden underneath them (FIGURE THIRTEEN).
4) Starting with the top six, carefully release the eighteen latches (circled) securing the DISPLAY MASK and remove it (FIGURE THIRTEEN).

   Note:- During this procedure you will probably find it necessary to remove the DISPLAY LATCH which is only secured in place by the DISPLAY MASK pressing down on it.

5) Refit the DISPLAY MASK in reverse order ensuring that (a) no cables are trapped, (b) the DISPLAY LATCH is replaced correctly, and (c) all the latches are snapped together securely.

FL Inverter and Contrast Board (T2100 and T2100CS)

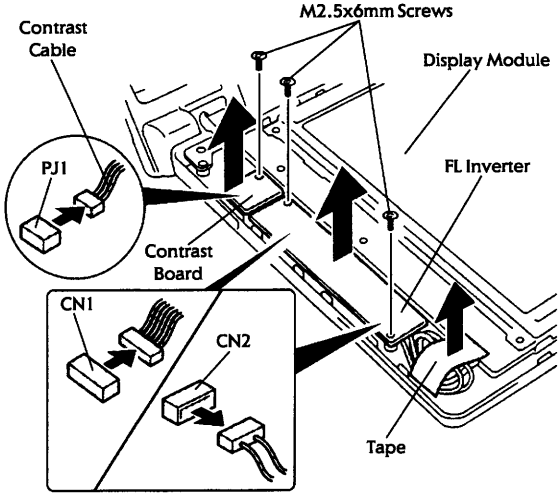

FIGURE FOURTEEN

1) Switch the T2100 off and disconnect all interconnecting cables including the mains lead.
2) Remove the BATTERY PACK as described earlier in this section.
3) Should they be installed, remove any PCMCIA cards and/or MEMORY CARDS as described earlier in this section.
4) Follow all instructions as detailed under the disassembly procedure **Display Mask** before proceeding.
5) If present, remove any TAPE covering the FL INVERTER (FIGURE FOURTEEN).
6) Remove the two screws (M2.5x6mm) securing the FL INVERTER to the display assembly and carefully pivot it over to lie on the DISPLAY MODULE (FIGURE FOURTEEN).
7) Disconnect the FL INVERTER cable from CN1, the fluorescent lamp cable from CN2 and remove the FL INVERTER from the display assembly (FIGURE FOURTEEN).
8) Remove the screw (M2.5x6mm) securing the CONTRAST BOARD and carefully pivot it over to lie on the DISPLAY MODULE taking care not to catch the contrast wheel (FIGURE FOURTEEN).
9) Carefully disconnect the CONTRAST CABLE from PJ1 on the underside of the CONTRAST BOARD and remove the CONTRAST BOARD from the display assembly (FIGURE FOURTEEN).
10) Refit the CONTRAST BOARD and FL INVERTER in reverse order.

Display Module (T2100)

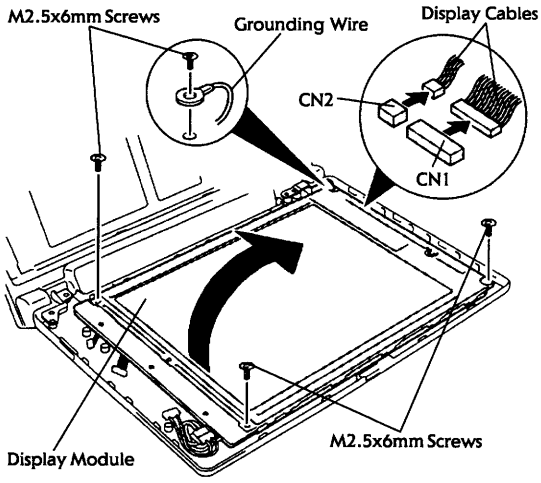

FIGURE FIFTEEN

1) Switch the T2100 off and disconnect all interconnecting cables including the mains lead.
2) Remove the BATTERY PACK as described earlier in this section.
3) Should they be installed, remove any PCMCIA cards and/or MEMORY CARDS as described earlier in this section.
4) Follow all instructions as detailed under the disassembly procedures **Display Mask** and **FL Inverter and Contrast Board (T2100 and T2100CS)** before proceeding.
5) Remove the four screws (M2.5x6mm) securing the DISPLAY MODULE noting that one screw also secures a GROUNDING WIRE (FIGURE FIFTEEN).
6) Carefully pivot the DISPLAY MODULE out of the display assembly as indicated to expose the two DISPLAY CABLES on its underside (FIGURE FIFTEEN).
7) Disconnect the DISPLAY CABLES from CN1 and CN2 on the back of the DISPLAY MODULE and remove it from the display assembly (FIGURE FIFTEEN).
8) Refit the DISPLAY MODULE in reverse order ensuring that the GROUNDING WIRE is correctly attached.

Display Module (T2100CS)

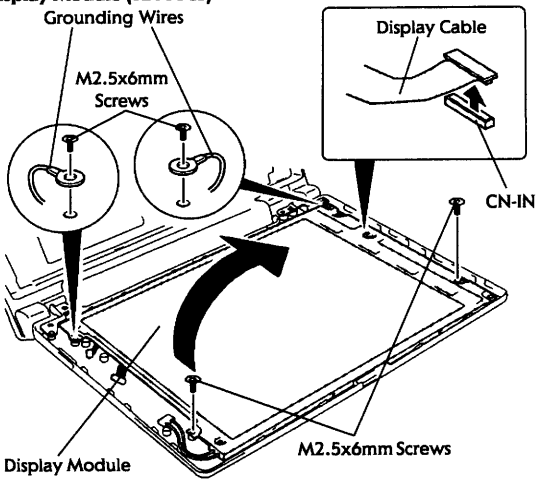

FIGURE SIXTEEN

1) Switch the T2100 off and disconnect all interconnecting cables including the mains lead.
2) Remove the BATTERY PACK as described earlier in this section.
3) Should they be installed, remove any PCMCIA cards and/or MEMORY CARDS as described earlier in this section.
4) Follow all instructions as detailed under the disassembly procedures **Display Mask** and **FL Inverter and Contrast Board (T2100 and T2100CS)** before proceeding.
5) Remove the four screws (M2.5x6mm) securing the DISPLAY MODULE noting that two screws also secure GROUNDING WIRES (FIGURE SIXTEEN).
6) Carefully pivot the DISPLAY MODULE out of the display assembly as indicated to expose the single DISPLAY CABLE on its underside (FIGURE SIXTEEN).
7) Disconnect the DISPLAY CABLE from CN-IN on the back of the DISPLAY MODULE and remove it from the display assembly (FIGURE SIXTEEN).
8) Refit the DISPLAY MODULE in reverse order ensuring that the GROUNDING WIRES are correctly attached.

FL Inverter (T2100CT)

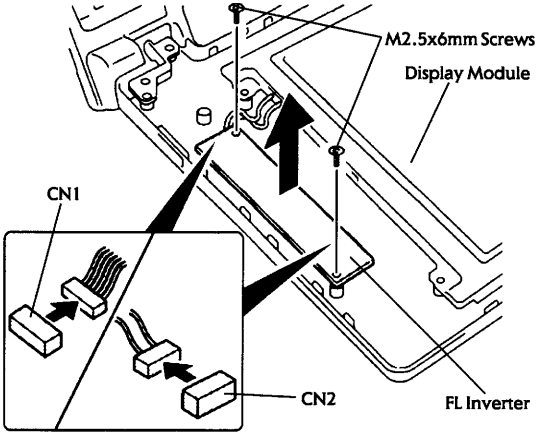

FIGURE SEVENTEEN

1) Switch the T2100 off and disconnect all interconnecting cables including the mains lead.
2) Remove the BATTERY PACK as described earlier in this section.
3) Should they be installed, remove any PCMCIA cards and/or MEMORY CARDS as described earlier in this section.
4) Follow all instructions as detailed under the disassembly procedure **Display Mask** before proceeding.
5) Remove the two screws (M2.5x6mm) securing the FL INVERTER to the display assembly and carefully pivot it over to lie on the DISPLAY MODULE (FIGURE SEVENTEEN).
6) Disconnect the FL INVERTER cable from CN1, the fluorescent lamp cable from CN2 and remove the FL INVERTER from the display assembly (FIGURE SEVENTEEN).
7) Refit the FL INVERTER in reverse order.

Display Module (T2100CT)

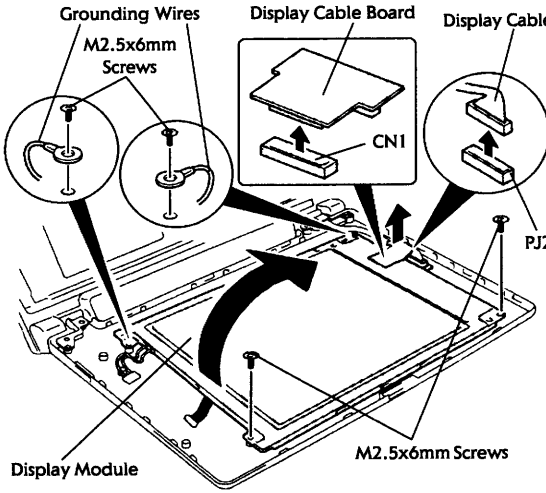

FIGURE EIGHTEEN

1) Switch the T2100 off and disconnect all interconnecting cables including the mains lead.
2) Remove the BATTERY PACK as described earlier in this section.
3) Should they be installed, remove any PCMCIA cards and/or MEMORY CARDS as described earlier in this section.
4) Follow all instructions as detailed under the disassembly procedures **Display Mask** and **FL Inverter (T2100CT)** before proceeding.
5) Remove the four screws (M2.5x6mm) securing the DISPLAY MODULE noting that two screws also secure GROUNDING WIRES (FIGURE EIGHTEEN).
6) Carefully pivot the DISPLAY MODULE out of the display assembly as indicated to expose the DISPLAY CABLE/DISPLAY CABLE BOARD assembly on its underside (FIGURE EIGHTEEN).

   Note:- You may find that the DISPLAY MODULE is backed by a metal shield which is not secured to either it or the display assembly. When refitting the DISPLAY MODULE you must ensure this shield is located correctly.

7) Disconnect the DISPLAY CABLE BOARD from CN1 on the back of the DISPLAY MODULE and remove the DISPLAY MODULE from the display assembly (FIGURE EIGHTEEN).
8) If required, disconnect the DISPLAY CABLE from PJ2 on the DISPLAY CABLE BOARD and remove the DISPLAY CABLE BOARD from the display assembly (FIGURE EIGHTEEN).
9) Refit the DISPLAY CABLE BOARD and DISPLAY MODULE in reverse order ensuring that (a) the metal shield behind the DISPLAY MODULE is located correctly, and (b) the GROUNDING WIRES are properly attached.

Real Mode Memory Map

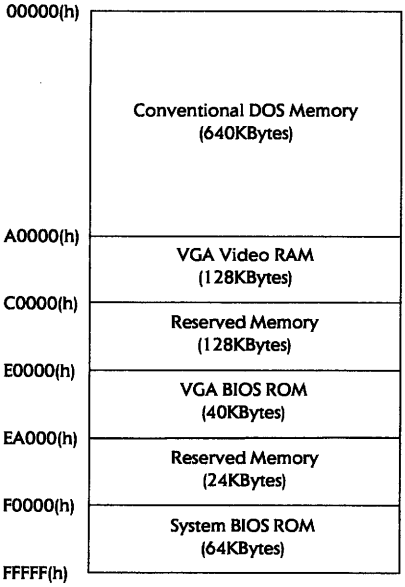

Interrupt Assignments

Interrupt Controller	Interrupt Level	Interrupt Assignment
-	NMI	RAM Parity Error, I/O Channel Error
1	0	Timer
	1	Keyboard
	2	Interrupt Controller for Levels 8 to 15
	3	COM2:
	4	COM1:
	5	Reserved
	6	Floppy Diskette Controller
	7	Printer (LPT1:)
2	8	Real Time Clock
	9	Software Redirect to INT 0A(h)
	10	Reserved
	11	Reserved
	12	PS/2 Mouse
	13	Math Co-Processor
	14	Hard Disk Controller
	15	Reserved

Direct Memory Access Assignments

DMA Controller	Channel Number	DMA Assignment
1	0	Not Used
	1	Reserved
	2	Floppy Diskette Drive
	3	Reserved
2	4	Cascade for DMA Controller One
	5	Reserved
	6	Reserved
	7	Not Used

Input/Output Port Assignments

I/O Port Address	Device/Function
000(h) to 01F(h)	82C37 - DMA Controller One
020(h) to 03F(h)	82C59 - Programmable Interrupt Controller One
040(h) to 05F(h)	82C54 - Timer
060(h) to 06F(h)	Keyboard Controller and System Status
070(h)	NMI Mask Register
070(h) to 07F(h)	Real Time Clock
080(h) to 09F(h)	DMA Page Register
0A0(h) to 0BF(h)	82C59 - Programmable Interrupt Controller Two
0C0(h) to 0DF(h)	82C37 - DMA Controller Two
0E0(h) to 0EF(h)	Special Register
0F0(h) to 0F7(h)	Math Co-Processor
100(h) to 1EF(h)	Not Used
1F0(h) to 1FF(h)	Hard Disk Controller
200(h) to 277(h)	Not Used
278(h) to 27F(h)	Printer (LPT2:)
280(h) to 2F7(h)	Not Used
2F8(h) to 2FF(h)	COM2:
300(h) to 377(h)	Not Used
378(h) to 37F(h)	Printer (LPT1:)
380(h) to 3AF(h)	Not Used
3B0(h) to 3BF(h)	Printer (LPT3:)
3C0(h) to 3DF(h)	CGA, EGA and VGA
3E0(h) to 3EF(h)	Not Used
3F0(h) to 3F7(h)	Floppy Diskette Controller
3F8(h) to 3FF(h)	COM1:
400(h) to 47F(h)	Not Used
480(h) to 49F(h)	DMA High Page Register

This page is intentionally left blank

T2150CD
Range

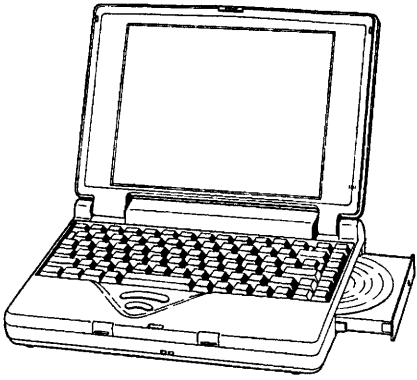

T2150CD Notebook Range

Section Index

Product Specifications 152
Battery Specifications 152
Product Features 152
Battery Release Procedure 153
Upgrade Procedures 153
  Memory Expansion Cards 153
  PCMCIA Cards 153
Setup Screen Layout 154
FN-HotKey Functions 155
Disassembly Procedures 156
  Keyboard 156
  Sound Card 157
  Hard Disk Drive 159
  Top Cover Assembly 161
  AC Power Supply Unit 163
  CD-ROM Drive 164
  System Board, Backup Battery and RTC Battery 165
  Display Mask 166
  FL Inverter and Contrast Board (T2150CDS) 167
  Display Module (T2150CDS) 168
  FL Inverter (T2150CDT) 169
  Display Module (T2150CDT) 170
Real Mode Memory Map 171
Interrupt Assignments 172
Direct Memory Access Assignments 172
Input/Output Port Assignments 173

T2150CD Notebook Range

Product Specifications

	T2150CDS	T2150CDT
Processor	i80486DX/4	i80486DX/4
Clock Speed	75MHz	75MHz
Standard Memory	4MBytes	8MBytes
Maximum Memory	28MBytes	32MBytes
Hard Disk Drive	260/520 Million Bytes	520 Million Bytes
Floppy Diskette Drive	1.44MBytes (Ext)	1.44MBytes (Ext)
Display Type	ASTN Colour	TFT Colour
Display Resolution	VGA/S-VGA	VGA/S-VGA
Display Colour Palette	256 Colours	65,536 Colours
Internal Modem Slot	Yes (PCMCIA)	Yes (PCMCIA)
Serial Port	Yes	Yes
Enhanced Parallel Port	Yes	Yes
Monitor Port	Yes	Yes
PS/2 Mouse Port	No	No
PS/2 Keyboard Port	Yes	Yes
Keyboard Type	84-Keys	84-Keys
DeskStation Expansion	Port Replicator Only	Port Replicator Only
Maximum Battery Life	3 Hours	3 Hours
Weight (kg/lb)	3.2/7.0	3.2/7.0

Battery Specifications

Toshiba Part Number PA2437U-Y
Power Rating 2,600mA/hour, 12 volts DC

Product Features

* 3.3 Volt Processor Technology
* Processor Reset Button
* Resume Mode Provision
* Max-Time Power Management
* Advanced Power Management
* VESA Local Bus Graphics
* BitBlk Graphics Accelerator
* Built-in 5.25" IDE CD-ROM Drive
* Built-in Sound System (SoundBlaster Pro Compatible)
* Integrated Microphone
* Multipurpose PCMCIA Slot (2 x Type II / 1 x Type III)
* AccuPoint Mouse
* 800x600x256 External S-VGA
* 1024x768x256 External S-VGA
* 65,536 Onscreen Colours (T2150CDT Only)
* Kensington Cable Lock
* HotLock Security
* NiH_2 Battery
* Flash BIOS Firmware

Please refer to the Appendices at the back of this booklet for a description of some of the features described above

Battery Release Procedure

The battery release procedure for the T2150CD range is exactly the same as for the T2100 range. Please refer to the T2100 section for details on how to remove and install additional battery packs.

Upgrade Procedures

Memory Expansion Cards

The memory upgrade procedure for the T2150CD range is exactly the same as for the T2100 range. Please refer to the T2100 section for details on how to install additional memory cards.

PCMCIA Cards

The PCMCIA card upgrade procedure for the T2150CD range is exactly the same as for the T2100 range. Please refer to the T2100 section for details on how to install additional PCMCIA card options.

Setup Screen Layout

T2150CDS (ASTN Colour Version)

SYSTEM SETUP — BIOS version = x.xx

MEMORY		I/O PORTS	
Total	= 4096KB	Serial Port	= COM1(IRQ4/3F8H)
Base	= 640KB	Parallel Port	= LPT1(378H)
Extended	= 3264KB	Sound System	= Address/IRQ/DMA
Shadow BIOS ROM	= 192KB		
		PASSWORD	
		Not Registered	
DISPLAY			
Display Adaptor	= VGA Compatible		
LCD Display Mode	= Color	**OTHERS**	
Ext. Scan Mode	= Interlace	Power-up Mode	= Boot
LCD Display Colors	= 222K Colors	CPU Cache	= Enabled
Power On Display	= Internal/External	Processing Speed	= High
Text Mode Stretch	= Enabled	Alarm Volume	= High
		System Beep	= Enabled
		Panel Power On/Off	= Disabled
BATTERY		Alarm Power On	= Disabled
Battery Save Mode	= Full Power	Keyboard	= Layout/Fn
Battery Level	= EEEEEEEF	Pointing Devices	= Auto-Selected
		Boot Priority	= FDD →HDD
HARD DISK			
HDD Mode	= Enhanced IDE(Normal)		

↑↓←→: Select Items, Space, BkSp : Change values
Esc: Exit without saving, Home: Set default values, End: Save changes and exit

Note 1:- When selected, the **Sound System** option presents a sub-menu which affects the configuration of the built-in sound card as follows:-

SOUND SYSTEM	
I/O Address	= 0220H
Interrupt Level	= IRQ10
DMA	= Channel 1

Note 2:- The **Panel Power On/Off** option only appears when the machine is configured to power-up in **Resume Mode**.

Note 3:- In addition to this basic setup screen information, there are a number of pre-configured settings associated with the **Battery Save Mode** option. When selected, these settings affect the way that the T2150CDS manages its battery usage as follows:-

Low Power		Full Power	
CPU Sleep Mode	= Enabled	CPU Sleep Mode	= Disabled
Display Auto Off	= 03Min.	Display Auto Off	= Disabled
HDD Auto Off	= 03Min.	HDD Auto Off	= Disabled
System Auto Off*	= 30Min.	System Auto Off*	= Disabled
LCD Brightness	= Semi-Bright	LCD Brightness	= Bright

* The **System Auto Off** option is offered only when the host system is configured for **Resume Mode** operation.

T2150CDT (TFT Colour Version)

SYSTEM SETUP — BIOS version = x.xx

MEMORY		I/O PORTS	
Total	= 8192KB	Serial Port	= COM1(IRQ4/3F8H)
Base	= 640KB	Parallel Port	= LPT1(378H)
Extended	= 7360KB	Sound System	= Address/IRQ/DMA
Shadow BIOS ROM	= 192KB		
		PASSWORD	
		Not Registered	
DISPLAY			
Display Adaptor	= VGA Compatible		
LCD Display Mode	= Color	**OTHERS**	
Ext. Scan Mode	= Interlace	Power-up Mode	= Boot
LCD Display Colors	= 256K Colors	CPU Cache	= Enabled
Power On Display	= Internal/External	Processing Speed	= High
Text Mode Stretch	= Enabled	Alarm Volume	= High
		System Beep	= Enabled
BATTERY		Panel Power On/Off	= Disabled
Battery Save Mode	= Full Power	Alarm Power On	= Disabled
Battery Level	= E■■■■■■■F	Keyboard	= Layout/Fn
		Pointing Devices	= Auto-Selected
HARD DISK		Boot Priority	= FDD → HDD
HDD Mode	= Enhanced IDE(Normal)		

↑↓←→: Select Items, Space, BkSp : Change values
Esc: Exit without saving, Home: Set default values, End: Save changes and exit

Note 1:- When selected, the **Sound System** option presents a sub-menu which affects the configuration of the built-in sound card as follows:-

SOUND SYSTEM	
I/O Address	= 0230H
Interrupt Level	= IRQ7
DMA	= Channel 1

Note 2:- The **Panel Power On/Off** option only appears when the machine is configured to power-up in **Resume Mode.**

Note 3:- In addition to this basic setup screen information, there are a number of pre-configured settings associated with the **Battery Save Mode** option. When selected, these settings affect the way that the T2150CDT manages its battery usage as follows:-

Low Power		Full Power	
CPU Sleep Mode	= Enabled	CPU Sleep Mode	= Disabled
Display Auto Off	= 03Min.	Display Auto Off	= 30Min.
HDD Auto Off	= 03Min.	HDD Auto Off	= Disabled
System Auto Off*	= 30Min.	System Auto Off*	= Disabled
LCD Brightness	= Semi-Bright	LCD Brightness	= Bright

* The **System Auto Off** option is offered only when the host system is configured for **Resume Mode** operation.

FN-HotKey Functions

The FN-HotKey functions for the T2150CD range are exactly the same as for the T2100 range. Please refer to the T2100 section for details as to which configuration and setup changes can be made using this feature.

Keyboard

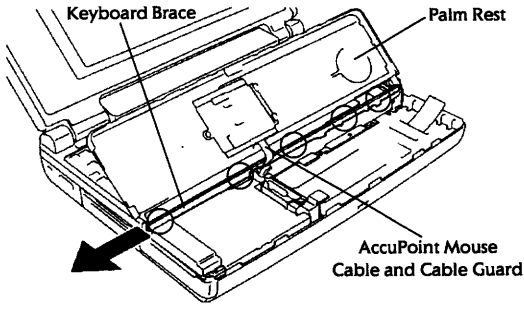

FIGURE ONE

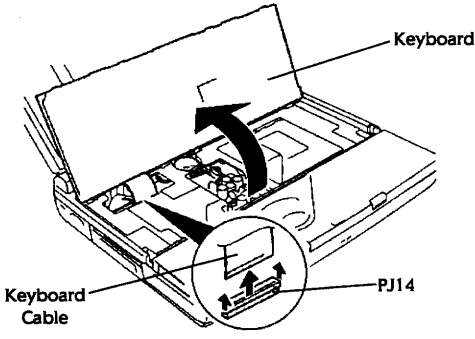

FIGURE TWO

1) Switch the T2150CD off and disconnect all interconnecting cables including the mains lead.
2) Remove the BATTERY PACK as described earlier in this section.
3) Should they be installed, remove any PCMCIA cards and/or MEMORY CARDS as described earlier in this section.
4) Ensure the front edge of the T2150CD is towards you and the PALM REST is in the open position (FIGURE ONE).
5) Carefully release the five latches (circled) securing the KEYBOARD BRACE and remove it by sliding it towards the left of the system unit. Take extreme care that you do not damage the ACCUPOINT MOUSE CABLE AND CABLE GUARD during this procedure (FIGURE ONE).
6) Close the PALM REST, lift the KEYBOARD out of the system unit and pivot it backwards to lie against the display assembly (FIGURE TWO).
7) Carefully release the locking pegs on ZIF connector PJ14, withdraw the KEYBOARD CABLE from within it and remove the KEYBOARD from the system (FIGURE TWO).
8) Refit the KEYBOARD in reverse order ensuring that the KEYBOARD BRACE is located behind the ACCUPOINT MOUSE CABLE AND CABLE GUARD and that its latches are securely locked in place.

Sound Card

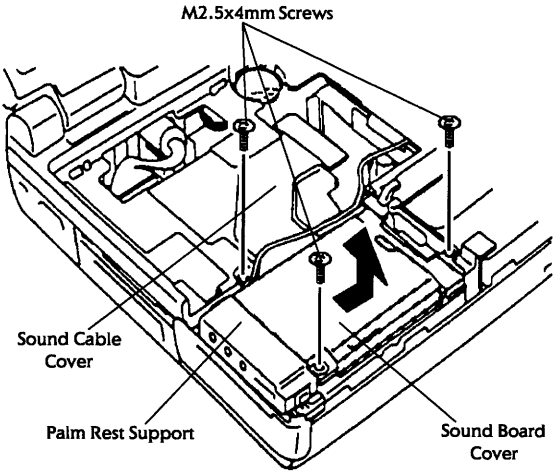

FIGURE THREE

1) Switch the T2150CD off and disconnect all interconnecting cables including the mains lead.
2) Remove the BATTERY PACK as described earlier in this section.
3) Should they be installed, remove any PCMCIA cards and/or MEMORY CARDS as described earlier in this section.
4) Follow all instructions as detailed under the disassembly procedure **Keyboard** before proceeding.
5) Carefully release the locking pegs on ZIF connector PJ13 and withdraw the ACCUPOINT MOUSE CABLE from within it.
6) Carefully unlatch the PALM REST from the left and right hand sides of the system unit and remove it.
7) Remove the screw (M2.5x4mm) securing the SOUND CABLE COVER and lift it out of the system unit noting how it is latched underneath the TOP COVER assembly at its right hand corner (FIGURE THREE).
8) Peel back and remove any tape securing the various SOUND CARD cables noting how they are routed over the TOP COVER assembly.
9) Remove the two screws (M2.5x4mm) securing the SOUND BOARD COVER and lift it out of the system unit noting that its left hand edge is latched underneath the PALM REST SUPPORT (FIGURE THREE).
10) Unplug the SOUND CABLE from PJ1 on the SOUND CARD and PJ15 on the SYSTEM BOARD and remove it from the system unit (FIGURE FOUR overleaf).

/continued/

Sound Card (continued)

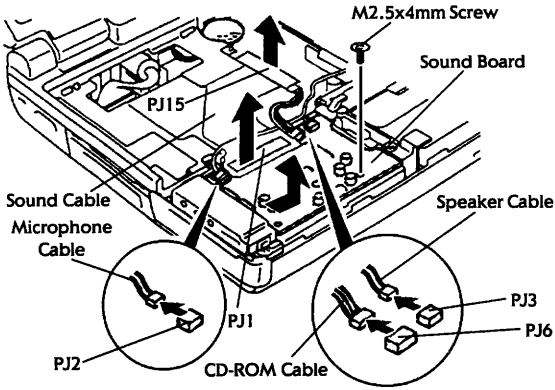

FIGURE FOUR

11) Unplug the MICROPHONE CABLE from PJ2, the SPEAKER CABLE from PJ3 and the CD-ROM CABLE from PJ6, all on the top edge of the SOUND CARD (FIGURE FOUR).

Note:- During this procedure note how the various cables are routed over the TOP COVER assembly together with how they are located beneath the clear plastic cover immediately next to connector PJ15.

12) Remove the screw (M2.5x4mm) securing the SOUND CARD, slide it towards the centre of the computer and remove it from the system unit (FIGURE FOUR).
13) Refit the SOUND CARD in reverse order ensuring that all of the cables are routed and located correctly, and that they are held in place by the tape removed in step (8).

Hard Disk Drive

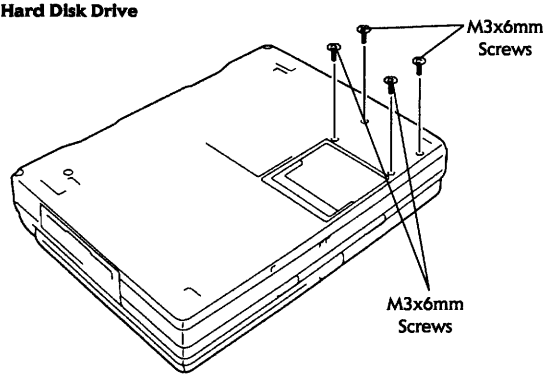

FIGURE FIVE

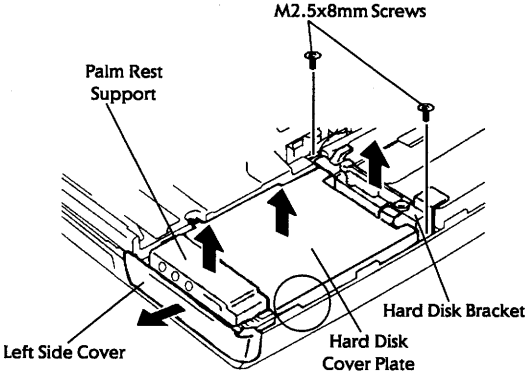

FIGURE SIX

1) Switch the T2150CD off and disconnect all interconnecting cables including the mains lead.
2) Remove the BATTERY PACK as described earlier in this section.
3) Should they be installed, remove any PCMCIA cards and/or MEMORY CARDS as described earlier in this section.
4) Follow all instructions as detailed under the disassembly procedures **Keyboard** and **Sound Card** before proceeding.
5) Close the screen, turn the T2150CD upside down, place it on a flat surface and remove the four screws (M3x6mm) securing the HARD DISK DRIVE (FIGURE FIVE).
6) Turn the T2150CD the right way up and open the screen .
7) Carefully release the latches on the front and back edges of the PALM REST SUPPORT and lift it away from the system unit (FIGURE SIX).

/continued/

Hard Disk Drive (continued)

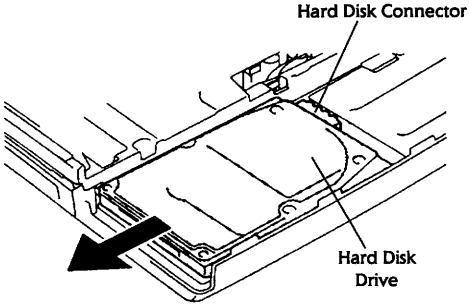

FIGURE SEVEN

8) Release the latches on the front and back edges of the LEFT SIDE COVER and remove it from the system unit (FIGURE SIX overleaf).
9) Remove the two screws (M2.5x8mm) securing the HARD DISK BRACKET and the HARD DISK COVER PLATE (FIGURE SIX overleaf).
10) Lift the HARD DISK BRACKET vertically out of the system unit (FIGURE SIX overleaf).
11) Carefully lift the HARD DISK COVER PLATE out of the system unit noting the single latch (circled) securing its front edge (FIGURE SIX overleaf).
12) Slide the HARD DISK DRIVE towards the left to release it from the HARD DISK CONNECTOR and lift it out of the system unit (FIGURE SEVEN).
13) Refit the HARD DISK DRIVE in reverse order.

Top Cover Assembly

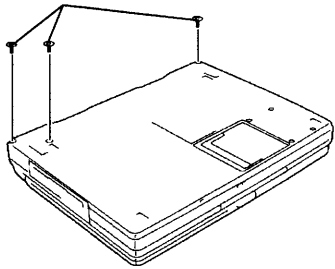

FIGURE EIGHT

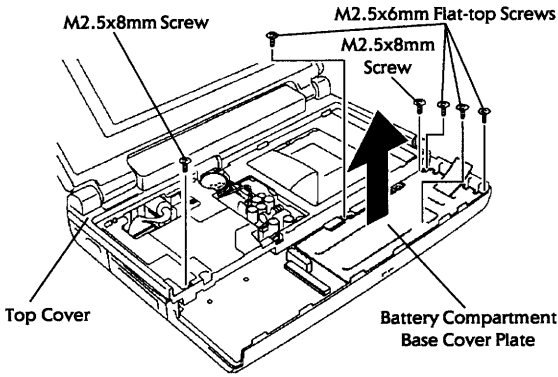

FIGURE NINE

1) Switch the T2150CD off and disconnect all interconnecting cables including the mains lead.
2) Remove the BATTERY PACK as described earlier in this section.
3) Should they be installed, remove any PCMCIA cards and/or MEMORY CARDS as described earlier in this section.
4) Follow all instructions as detailed under the disassembly procedures **Keyboard**, **Sound Card** and **Hard Disk Drive** before proceeding.
5) Close the screen, turn the T2150CD upside down, place it on a flat surface and remove the three screws (M2.5x8mm) securing the TOP COVER to the bottom cover (FIGURE EIGHT).
6) Turn the T2150CD the right way up, open the screen to a vertical position and lift up the black plastic cover within the battery compartment to expose the BATTERY COMPARTMENT BASE COVER PLATE beneath (FIGURE NINE).
7) Remove the four screws (M2.5x6mm Flat-top) securing the BATTERY COMPARTMENT BASE COVER PLATE and lift it out of the system unit (FIGURE NINE).

/continued/

Top Cover Assembly (continued)

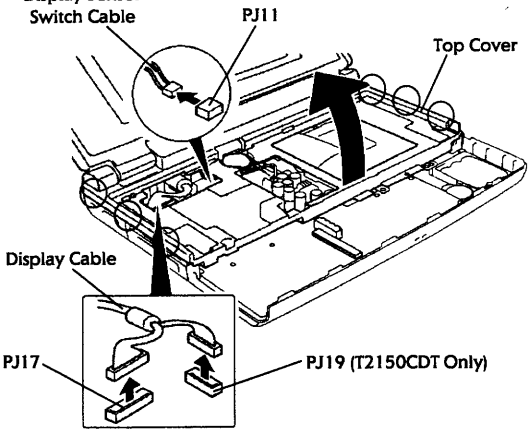

FIGURE TEN

8) Remove the two screws (M2.5x8mm) securing the TOP COVER (FIGURE NINE overleaf).
9) If present, peel back any tape covering either the DISPLAY SENSOR SWITCH CABLE and/or the DISPLAY CABLE (FIGURE TEN).
10) Carefully unplug the DISPLAY SENSOR SWITCH CABLE from PJ11 (FIGURE TEN).
11) Carefully unplug the DISPLAY CABLE from PJ17 and, for the T2150CDT only, PJ19 noting how the cable choke is located within its plastic housing on the TOP COVER assembly (FIGURE TEN).
12) Carefully release the six latches (circled) which secure the TOP COVER at it left and right hand edges and the three latches which secure its back edge, and lift it away from the bottom cover assembly noting that it may be partially restrained by the DISPLAY CABLE choke (FIGURE TEN).
13) Refit the TOP COVER assembly in reverse order ensuring that (a) the DISPLAY CABLE choke is correctly secured within it housing, and (b) the clear plastic pull tag for the battery is positioned on top of the black plastic sheet that covers the BATTERY COMPARTMENT BASE COVER PLATE.

AC Power Supply Unit

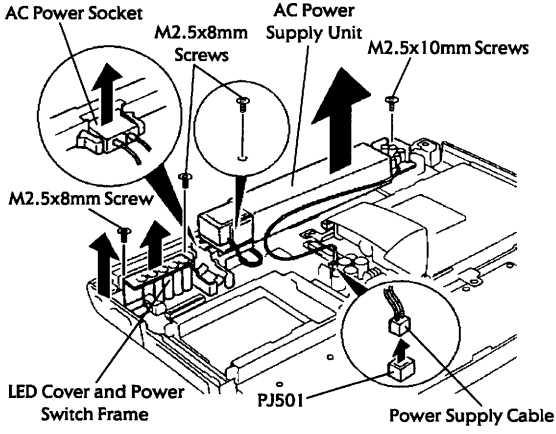

FIGURE ELEVEN

1) Switch the T2150CD off and disconnect all interconnecting cables including the mains lead.
2) Remove the BATTERY PACK as described earlier in this section.
3) Should they be installed, remove any PCMCIA cards and/or MEMORY CARDS as described earlier in this section.
4) Follow all instructions as detailed under the disassembly procedures **Keyboard, Sound Card, Hard Disk Drive** and **Top Cover Assembly** before proceeding.
5) Unplug the POWER SUPPLY CABLE from PJ501 on the SYSTEM BOARD (FIGURE ELEVEN).
6) Remove the screw (M2.5x10mm) securing the AC POWER SUPPLY UNIT and pivot it forward to fully expose the LED COVER AND POWER SWITCH FRAME (FIGURE ELEVEN).

   Note:- The AC POWER SUPPLY UNIT may be additionally secured by tape and/or sticky pads. If this is the case this will need to be released and/or removed before this procedure can be completed.

7) Remove the three screws (M2.5x8mm) securing the LED COVER AND POWER SWITCH FRAME and remove it, together with the power switch, from the system unit (FIGURE ELEVEN).
8) Slide the AC POWER SOCKET vertically out from the rear panel and remove the AC POWER SUPPLY UNIT from the system unit (FIGURE ELEVEN).
9) Refit the AC POWER SUPPLY UNIT in reverse order ensuring that the power switch is seated correctly within the LED COVER AND POWER SWITCH FRAME.

CD-ROM Drive

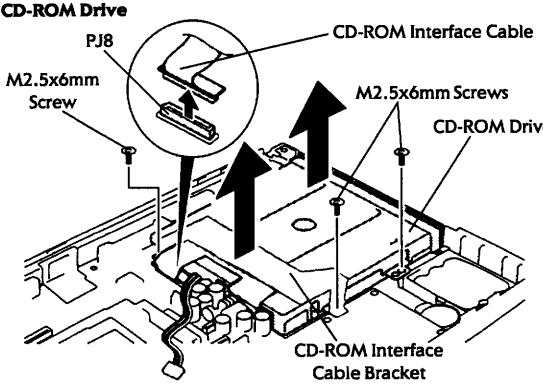

FIGURE TWELVE

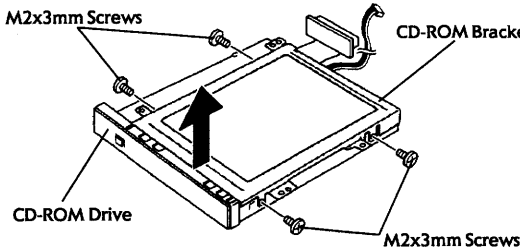

FIGURE THIRTEEN

1) Switch the T2150CD off and disconnect all interconnecting cables including the mains lead.
2) Remove the BATTERY PACK as described earlier in this section.
3) Should they be installed, remove any PCMCIA cards and/or MEMORY CARDS as described earlier in this section.
4) Follow all instructions as detailed under the disassembly procedures **Keyboard, Sound Card, Hard Disk Drive, Top Cover Assembly** and **AC Power Supply Unit** before proceeding.
5) Remove the two screws (M2.5x6mm) securing the CD-ROM INTERFACE CABLE BRACKET and remove it from the system unit (FIGURE TWELVE).
6) Unplug the CD-ROM INTERFACE CABLE from PJ8 on the SYSTEM BOARD (FIGURE TWELVE).
7) Remove the screw (M2.5x6mm) securing the CD-ROM DRIVE assembly and lift it out of the system unit (FIGURE TWELVE).
8) If required remove the CD-ROM INTERFACE CABLE and/or the CD-ROM CABLE from the rear edge of the CD-ROM DRIVE.
9) Turn the CD-ROM DRIVE assembly upside down, remove the four screws (M2x3mm) securing the CD-ROM BRACKET to the CD-ROM DRIVE and remove the CD-ROM DRIVE from it (FIGURE THIRTEEN).
10) Refit the CD-ROM DRIVE in reverse order ensuring that the CD-ROM INTERFACE CABLE is correctly secured beneath the CD-ROM INTERFACE CABLE BRACKET.

System Board, RTC Battery and Backup Battery

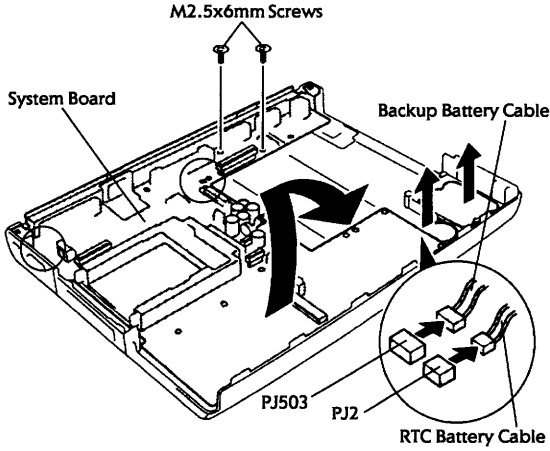

FIGURE FOURTEEN

1) Switch the T2150CD off and disconnect all interconnecting cables including the mains lead.
2) Remove the BATTERY PACK as described earlier in this section.
3) Should they be installed, remove any PCMCIA cards and/or MEMORY CARDS as described earlier in this section.
4) Follow all instructions as detailed under the disassembly procedures **Keyboard, Sound Card, Hard Disk Drive, Top Cover Assembly, AC Power Supply Unit** and **CD-ROM Drive** before proceeding.
5) Remove the two screws (M2.5x6mm) securing the SYSTEM BOARD (FIGURE FOURTEEN).
6) Lift the front edge of the SYSTEM BOARD so that it clears the two plastic locating lugs (circled) on the bottom cover and the remove it from the system unit (FIGURE FOURTEEN).

   Note:- Take extreme care during this procedure as you may find the rear edge of the SYSTEM BOARD becomes caught on the clear plastic/metal sheet which lines the bottom of the bottom cover assembly.

7) Unplug the RTC BATTERY from PJ2 on the underside of the SYSTEM BOARD (FIGURE FOURTEEN).
8) Unplug the BACKUP BATTERY from PJ503 on the underside of the SYSTEM BOARD (FIGURE FOURTEEN).
9) Refit the BACKUP BATTERY, RTC BATTERY and SYSTEM BOARD in reverse order.

Display Mask

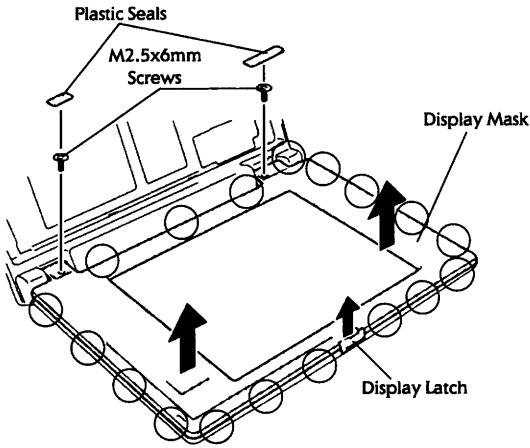

FIGURE FIFTEEN

1) Switch the T2150CD off and disconnect all interconnecting cables including the mains lead.
2) Remove the BATTERY PACK as described earlier in this section.
3) Remove the two PLASTIC SEALS from the left and right hinge arms of the DISPLAY MASK and remove the two screws (M2.5x6mm) hidden underneath them (FIGURE FIFTEEN).
4) Starting with the top six, carefully release the eighteen latches (circled) securing the DISPLAY MASK and remove it (FIGURE FIFTEEN).

   Note:- During this procedure you will probably find it necessary to remove the DISPLAY LATCH which is only secured in place by the DISPLAY MASK pressing down on it.

5) Refit the DISPLAY MASK in reverse order ensuring that (a) no cables are trapped, (b) the DISPLAY LATCH is replaced correctly, and (c) all the latches are snapped together securely.

FL Inverter and Contrast Board (T2150CDS)

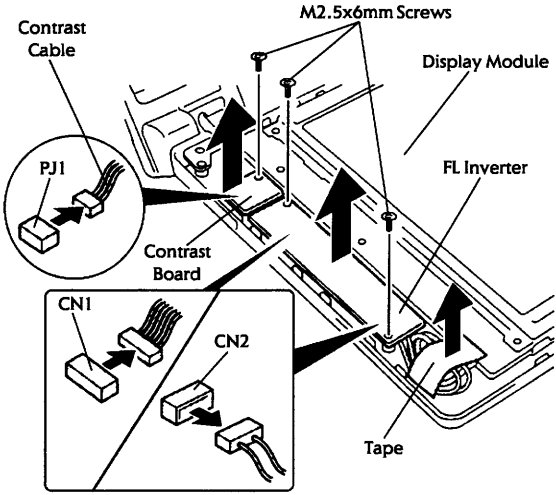

FIGURE SIXTEEN

1) Switch the T2150CDS off and disconnect all interconnecting cables including the mains lead.
2) Remove the BATTERY PACK as described earlier in this section.
3) Should they be installed, remove any PCMCIA cards and/or MEMORY CARDS as described earlier in this section.
4) Follow all instructions as detailed under the disassembly procedure **Display Mask** before proceeding.
5) If present, remove any TAPE covering the FL INVERTER (FIGURE SIXTEEN).
6) Remove the two screws (M2.5x6mm) securing the FL INVERTER to the display assembly and carefully pivot it over to lie on the DISPLAY MODULE (FIGURE SIXTEEN).
7) Disconnect the FL INVERTER cable from CN1, the fluorescent lamp cable from CN2 and remove the FL INVERTER from the display assembly (FIGURE SIXTEEN).
8) Remove the screw (M2.5x6mm) securing the CONTRAST BOARD and carefully pivot it over to lie on the DISPLAY MODULE taking care not to catch the contrast wheel (FIGURE SIXTEEN).
9) Carefully disconnect the CONTRAST CABLE from PJ1 on the underside of the CONTRAST BOARD and remove the CONTRAST BOARD from the display assembly (FIGURE SIXTEEN).
10) Refit the CONTRAST BOARD and FL INVERTER in reverse order.

Display Module (T2150CDS)

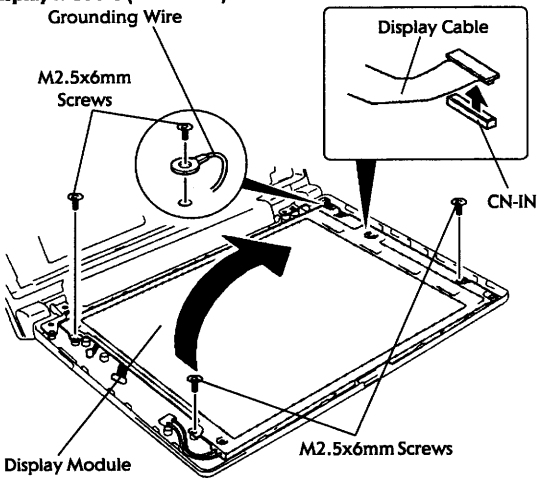

FIGURE SEVENTEEN

1) Switch the T2150CD off and disconnect all interconnecting cables including the mains lead.
2) Remove the BATTERY PACK as described earlier in this section.
3) Should they be installed, remove any PCMCIA cards and/or MEMORY CARDS as described earlier in this section.
4) Follow all instructions as detailed under the disassembly procedures **Display Mask** and **FL Inverter and Contrast Board (T2150CDS)** before proceeding.
5) Remove the four screws (M2.5x6mm) securing the DISPLAY MODULE noting that one screw also secures a GROUNDING WIRE (FIGURE SEVENTEEN).
6) Carefully pivot the DISPLAY MODULE out of the display assembly as indicated to expose the single DISPLAY CABLE on its underside (FIGURE SEVENTEEN).
7) Disconnect the DISPLAY CABLE from CN-IN on the back of the DISPLAY MODULE and remove it from the display assembly (FIGURE SEVENTEEN).
8) Refit the DISPLAY MODULE in reverse order ensuring that the GROUNDING WIRE is correctly attached.

FL Inverter (T2150CDT)

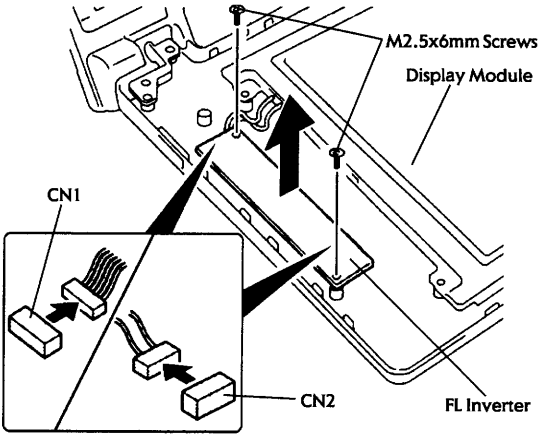

FIGURE EIGHTEEN

1) Switch the T2150CD off and disconnect all interconnecting cables including the mains lead.
2) Remove the BATTERY PACK as described earlier in this section.
3) Should they be installed, remove any PCMCIA cards and/or MEMORY CARDS as described earlier in this section.
4) Follow all instructions as detailed under the disassembly procedure **Display Mask** before proceeding.
5) Remove the two screws (M2.5x6mm) securing the FL INVERTER to the display assembly and carefully pivot it over to lie on the DISPLAY MODULE (FIGURE EIGHTEEN).
6) Disconnect the FL INVERTER cable from CN1, the fluorescent lamp cable from CN2 and remove the FL INVERTER from the display assembly (FIGURE EIGHTEEN).
7) Refit the FL INVERTER in reverse order.

Display Module (T2150CDT)

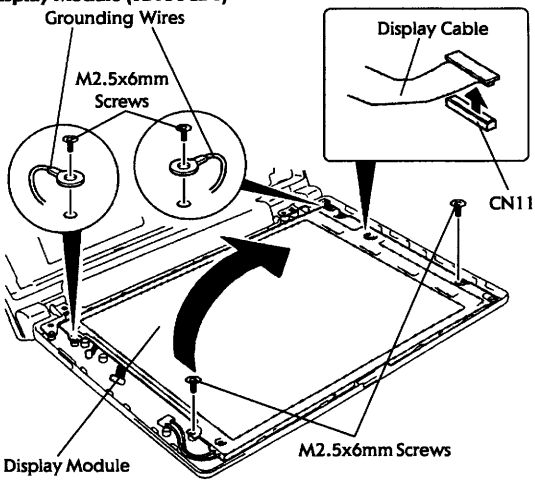

FIGURE NINETEEN

1) Switch the T2150CD off and disconnect all interconnecting cables including the mains lead.
2) Remove the BATTERY PACK as described earlier in this section.
3) Should they be installed, remove any PCMCIA cards and/or MEMORY CARDS as described earlier in this section.
4) Follow all instructions as detailed under the disassembly procedures **Display Mask** and **FL Inverter (T2150CDT)** before proceeding.
5) Remove the four screws (M2.5x6mm) securing the DISPLAY MODULE noting that two screws also secure GROUNDING WIRES (FIGURE NINETEEN).
6) Carefully pivot the DISPLAY MODULE out of the display assembly as indicated to expose the single DISPLAY CABLE on its underside (FIGURE NINETEEN).
7) Disconnect the DISPLAY CABLE from CN11 on the back of the DISPLAY MODULE and remove it from the display assembly (FIGURE NINETEEN).
8) Refit the DISPLAY MODULE in reverse order ensuring that the GROUNDING WIRES are correctly attached.

Real Mode Memory Map

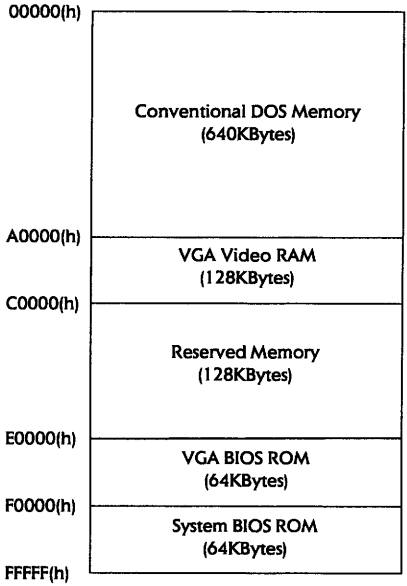

Interrupt Assignments

Interrupt Controller	Interrupt Level	Interrupt Assignment
-	NMI	RAM Parity Error, I/O Channel Error
1	0	Timer
	1	Keyboard
	2	Interrupt Controller for Levels 8 to 15
	3	COM2:
	4	COM1:
	5	Printer (LPT2:) / Sound System*
	6	Floppy Diskette Controller
	7	Printer (LPT1:) / Sound System*
2	8	Real Time Clock
	9	Sound System*
	10	Sound System*
	11	Reserved
	12	PS/2 Mouse
	13	Math Co-Processor
	14	Hard Disk Controller
	15	CD-ROM Drive

* The SoundBlaster Pro Compatible Sound System on the T2150CDS and T2150CDT can be configured to use interrupt levels 5, 7, 9 or 10.

Direct Memory Access Assignments

DMA Controller	Channel Number	DMA Assignment
1	0	Sound System*
	1	Sound System*
	2	Floppy Diskette Drive
	3	Reserved
2	4	Cascade for DMA Controller One
	5	Reserved
	6	Reserved
	7	Not Used

* The SoundBlaster Pro Compatible Sound System on the T2150CDS and T2150CDT can be configured to use direct memory access levels 0 or 1.

Input/Output Port Assignments

I/O Port Address	Device/Function
000(h) to 01F(h)	82C37 - DMA Controller One
020(h) to 03F(h)	82C59 - Programmable Interrupt Controller One
040(h) to 05F(h)	82C54 - Timer
060(h) to 06F(h)	Keyboard Controller
070(h)	NMI Mask Register
070(h) to 07F(h)	Real Time Clock
080(h) to 09F(h)	DMA Page Register
0A0(h) to 0BF(h)	82C59 - Programmable Interrupt Controller Two
0C0(h) to 0DF(h)	82C37 - DMA Controller Two
0E0(h) to 0EF(h)	Special Register
0F0(h) to 0F7(h)	Math Co-Processor
100(h) to 16F(h)	Not Used
170(h) to 177(h)	CD-ROM Drive
178(h) to 1EF(h)	Not Used
1F0(h) to 1FF(h)	Hard Disk Controller
200(h)	Not Used
201(h)	Joystick
202(h) to 21F(h)	Not Used
220(h) to 25F(h)	Sound System
260(h) to 277(h)	Not Used
278(h) to 27F(h)	Printer (LPT2:)
280(h) to 2F7(h)	Not Used
2F8(h) to 2FF(h)	COM2:
300(h) to 375(h)	Not Used
376(h) to 377(h)	CD-ROM Drive
378(h) to 37F(h)	Printer (LPT1:)
380(h) to 387(h)	Not Used
388(h) to 38B(h)	Sound System (OPL3)
38C(h) to 3AF(h)	Not Used
3B0(h) to 3BF(h)	Printer (LPT3:)
3C0(h) to 3DF(h)	CGA, EGA and VGA
3E0(h) to 3EF(h)	Not Used
3F0(h) to 3F7(h)	Floppy Diskette Controller / Hard Disk Controller
3F8(h) to 3FF(h)	COM1:
400(h) to 47F(h)	Not Used
480(h) to 49F(h)	DMA High Page Register

This page is intentionally left blank

T2200SX

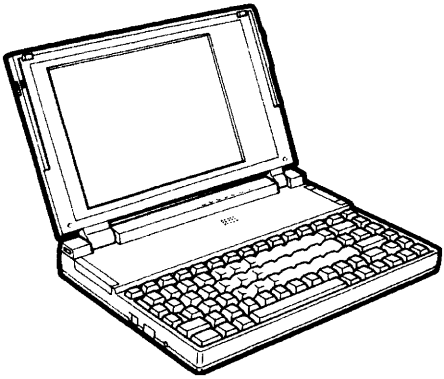

T2200SX Notebook

Section Index

Product Specifications 176
Mains Adapter and Battery Specifications 176
Product Features 176
Battery Release Procedure 177
Upgrade Procedures 178
  Memory Expansion Cards 178
  i80387SX Math Co-Processor 179
  JEIDA Cards 180
Setup Screen Layout 181
FN-Popup Window Layout 181
Disassembly Procedures 182
  Bottom Cover 182
  Battery Terminals 183
  Power Supply Board. 184
  Hard Disk Drive. 185
  Speaker and System Board 187
  RTC Battery, PS/2 Mouse Port and Floppy Diskette Drive . 189
  Keyboard 190
  FL Inverter and Display Module 191
Real Mode Memory Map 193
Interrupt Assignments 194
Direct Memory Access Assignments 194
Input/Output Port Assignments 195

T2200SX Notebook

Product Specifications

	T2200SX
Processor	i80386SX
Clock Speed	20MHz
Standard Memory	2MBytes
Maximum Memory	10MBytes
Hard Disk Drive	60/80Mb
Floppy Diskette Drive	1.44MBytes
Display Type	STN Mono
Display Resolution	VGA
Display Colour Palette	16 Grey Scales
Internal Modem Slot	Yes (JEIDA)
Serial Port	Yes
Parallel Port	Yes
Monitor Port	Yes
PS/2 Mouse Port	Yes
PS/2 Keyboard Port	No
Keyboard Type	84-Keys
DeskStation Expansion	DS-IV
Maximum Battery Life	3 Hours
Weight (kg/lb)	2.5/5.5

Mains Adapter and Battery Specifications

Mains Adapter
Toshiba Part Number PA2400U-E
Output Rating 18 volts, 1.1 amps

Battery Pack
Toshiba Part Number PA2404E
Power Rating
2,200mA/hour, 14.4 volts DC

Product Features

* Processor Reset Button
* Resume Mode Provision
* Hard-RAM Provision
* Max-Time Power Management
* JEIDA Slot
* NiH_2 Battery

Please refer to the Appendices at the back of this booklet for a description of some of the features described above

Battery Release Procedure

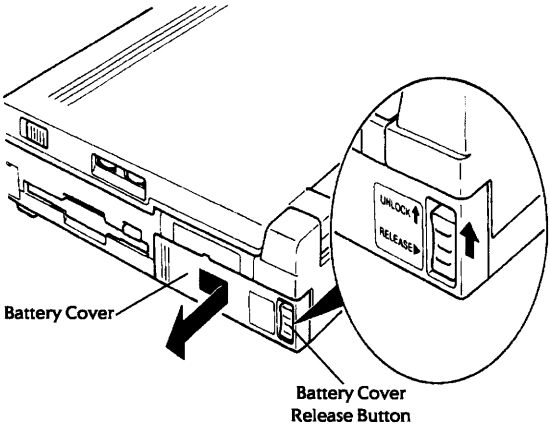

FIGURE ONE

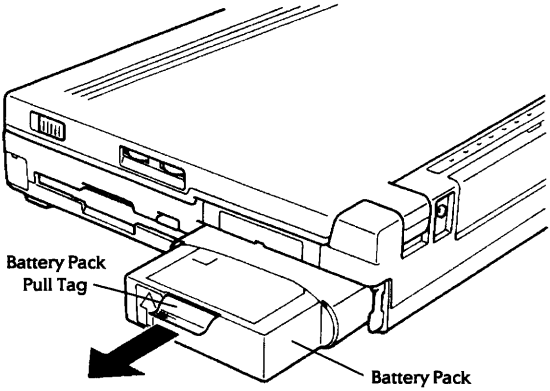

FIGURE TWO

1) Switch the T2200SX off and disconnect all interconnecting cables including the mains adapter.
2) Turn the T2200SX around so that its right hand side is towards you.
3) Move the BATTERY COVER RELEASE BUTTON to its UNLOCK position while at the same time sliding the BATTERY COVER towards the rear of the system (FIGURE ONE).
4) Remove the BATTERY COVER.
5) Grasp the BATTERY PACK PULL TAG and pull the BATTERY PACK until it is free from the system (FIGURE TWO).
6) Refit the BATTERY PACK in reverse order ensuring that the BATTERY COVER is seated correctly and the BATTERY COVER RELEASE BUTTON is set to its locked position (down).

Memory Expansion Cards

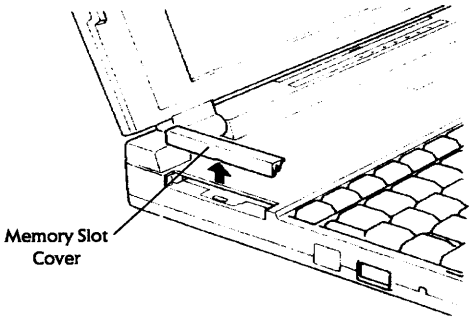

FIGURE ONE

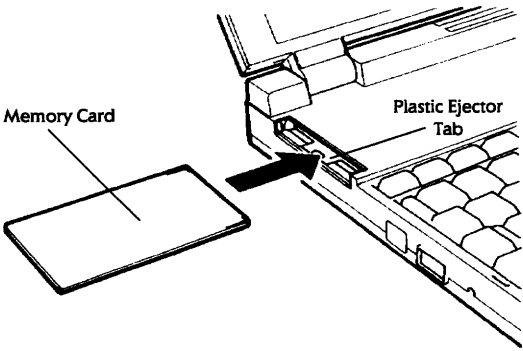

FIGURE TWO

1) Ensure the T2200SX is configured to start in Boot Mode.
2) Switch the T2200SX off and disconnect all interconnecting cables including the mains adapter.
3) Open the screen.
4) Turn the T2200SX around so that its left hand side is towards you.
5) Remove the MEMORY SLOT COVER (FIGURE ONE).
6) Ensure that the PLASTIC EJECTOR TAB is pushed as far into the system as is possible (FIGURE TWO).
7) Insert the MEMORY CARD ensuring that it is oriented correctly (FIGURE TWO).

7a) Remove the MEMORY CARD by grasping the PLASTIC EJECTOR TAB and pulling it outwards.

8) Replace the MEMORY SLOT COVER.
9) Turn on the T2200SX. The system will automatically recognise the additional memory during the boot sequence.

CAUTION **Do not touch the connecting edge of the memory card as debris, oil or grease in or on this connector may cause memory access problems.**

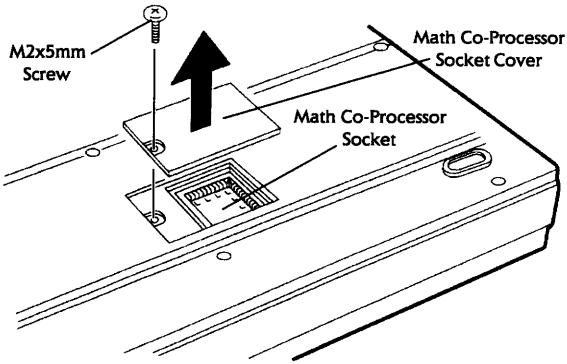

FIGURE ONE

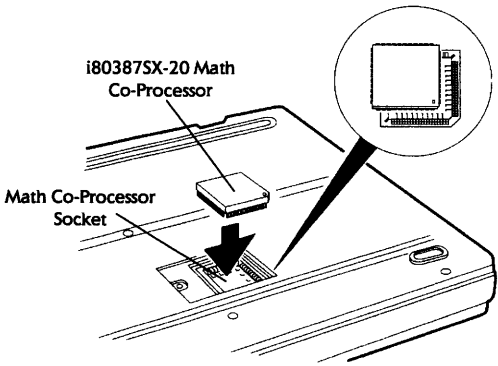

FIGURE TWO

1) Ensure the T2200SX is configured to start in Boot Mode.
2) Switch the T2200SX off and disconnect all interconnecting cables including the mains adapter.
3) Turn the T2200SX upside down and place it on a flat surface.
4) Remove the screw (M2x5mm) securing the MATH CO-PROCESSOR SOCKET COVER and remove the cover (FIGURE ONE).
5) Insert the i80387SX-20 MATH CO-PROCESSOR into the MATH CO-PROCESSOR SOCKET ensuring that it is oriented correctly (FIGURE TWO).
6) Replace and secure the MATH CO-PROCESSOR SOCKET COVER.
7) Turn on the T2200SX. The system will automatically recognise the presence of the math co-processor as part of the boot sequence.

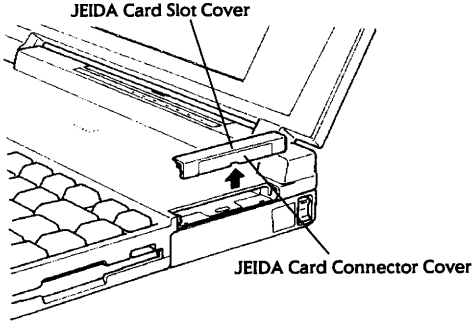

FIGURE ONE

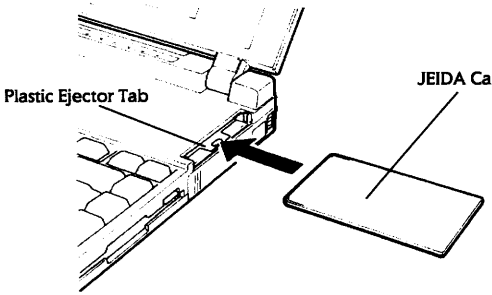

FIGURE TWO

1) Ensure the T2200SX is configured to start in Boot Mode.
2) Switch the T2200SX off and disconnect all interconnecting cables including the mains adapter.
3) Open the screen.
4) Turn the T2200SX around so that its right hand side is towards you.
5) Remove the JEIDA CARD SLOT COVER (FIGURE ONE).
6) Ensure that the PLASTIC EJECTOR TAB is pushed as far into the system as is possible (FIGURE TWO).
7) Insert the JEIDA CARD ensuring that it is oriented correctly (FIGURE TWO).

7a) Remove the JEIDA CARD by grasping the PLASTIC EJECTOR TAB and pulling it outwards.

8) If the installed JEIDA card requires connection to an external interface then remove the JEIDA CARD CONNECTOR COVER from the JEIDA CARD SLOT COVER (FIGURE ONE).
9) Replace the JEIDA CARD SLOT COVER.
10) Turn on the T2200SX. If required you may need to configure the JEIDA card to operate correctly - refer to the manufacturer's documentation for details on how to achieve this.

CAUTION **Do not touch the connecting edge of the JEIDA card as debris, oil or grease in or on this connector may cause access problems.**

Setup Screen Layout

T2200SX SETUP

MEMORY		COM/PRT/FDD	
Total	= 2048KB	Serial Port	= COM1 (IRQ4/3F8H)
Base	= 640KB		
Extended	= 1280KB	Card Modem	= COM2 (IRQ3/2F8H)
Hard RAM	= 0KB		
		External FDD/PRT	= Printer
Shadow BIOS ROM	= Enable (128KB)	Printer Port Type	= Output
DISPLAY		**POWER SAVE OPTIONS**	
Display Adaptor	= VGA Compatible	CPU Sleep Mode	= Enable
LCD Display Mode	= Color	HDD Auto Off	= Disable
LCD Gray Scale		Display Auto Off	= Disable
= Normal : Semi-Bright, Intense : Bright			
LCD Gray Scale Level	= Normal 16 Levels	**OTHERS**	
		Resume Mode	= Boot
HARD DISK		Popup	= Enable
Capacity	= 80MB	Speaker	= On
		Battery Alarm	= On
TIME & DATE		Processing Speed	= High
00:00:00, Tue Jan 1, 1992			

↑↓←→: Select items, Space, BkSp : Change values
Esc: Exit without saving, Home: Set default values, End: Save and reboot

FN-Popup Window Layout

The T2200SX FN-Popup user status and configuration window allows the following information to be viewed and/or changed:-

Page One

Remaining Battery Capacity : E■■■■■■■F
LCD Gray Scale Level : Normal 16 Levels

Speaker : On Off Mode : Resume Boot
Battery Alarm : On Off

Page Two

Card Modem Power : On Off*
Sleep : Enabled Disabled

HDD Auto Power Off : Disabled
Display Auto Off : Disabled

* The **Card Modem Power** option is only displayed when an internal modem is installed into the system.

Bottom Cover

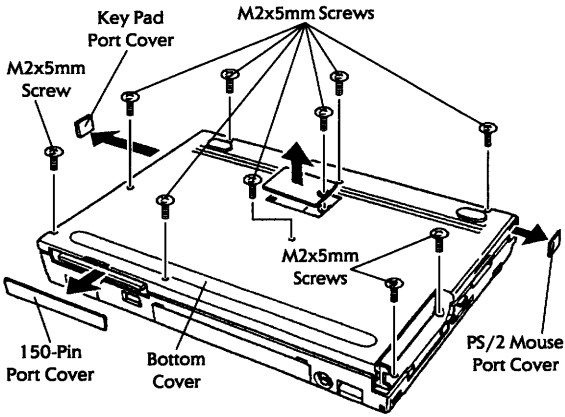

FIGURE ONE

1) Switch the T2200SX off and disconnect all interconnecting cables including the mains adapter.
2) Remove the BATTERY PACK as described earlier in this section.
3) Should they be installed, remove the JEIDA card and/or MEMORY CARD as described earlier in this section.
4) Remove the 150-PIN PORT COVER from the rear of the system, the PS/2 MOUSE PORT COVER and JEIDA CARD CONNECTOR COVER from the right edge and the KEY PAD PORT COVER and MEMORY SLOT COVER from the left edge (FIGURE ONE).
5) Turn the T2200SX upside down and place it on a flat surface.
6) Remove the ten screws (M2x5mm) securing the BOTTOM COVER to the system unit and carefully lift it, together with the MATH CO-PROCESSOR SOCKET COVER, off (FIGURE ONE).
7) Refit the BOTTOM COVER in reverse order ensuring that the FLOPPY DISKETTE DRIVE cover does not become trapped in any way.

Battery Terminals

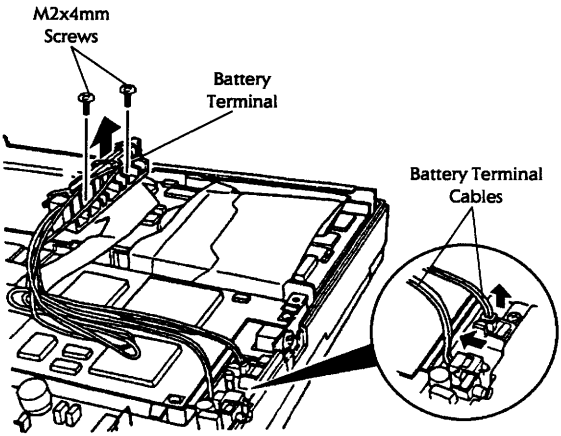

FIGURE TWO

1) Switch the T2200SX off and disconnect all interconnecting cables including the mains adapter.
2) Remove the BATTERY PACK as described earlier in this section.
3) Should they be installed, remove the JEIDA card and/or MEMORY CARD as described earlier in this section.
4) Follow all instructions as detailed under the disassembly procedure **Bottom Cover** before proceeding.
5) Unplug the backup battery from the POWER SUPPLY BOARD and remove it from the system.
6) Unplug the BATTERY TERMINAL CABLES from PJ1 and PJ2 on the POWER SUPPLY BOARD (FIGURE TWO).
7) Remove the two recessed screws (M2x4mm) securing the BATTERY TERMINAL to the system unit and remove it ensuring that the BATTERY TERMINAL CABLES are carefully fed underneath the hard disk connector cable (FIGURE TWO).
8) Refit the BATTERY TERMINAL in reverse order ensuring the BATTERY TERMINAL CABLES are routed underneath the hard disk connector cable.

Power Supply Board

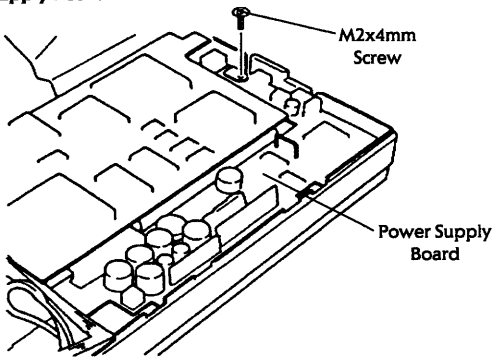

FIGURE THREE

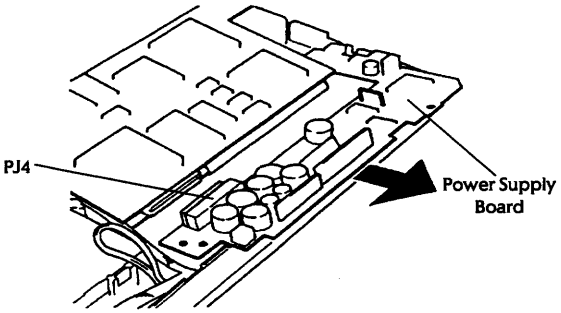

FIGURE FOUR

1) Switch the T2200SX off and disconnect all interconnecting cables including the mains adapter.
2) Remove the BATTERY PACK as described earlier in this section.
3) Should they be installed, remove the JEIDA card and/or MEMORY CARD as described earlier in this section.
4) Follow all instructions as detailed under the disassembly procedure **Bottom Cover** and **Battery Terminals** (steps (1) through (6)) before proceeding.
5) Remove the screw (M2x4mm) securing the POWER SUPPLY BOARD to the system unit (FIGURE THREE).
6) Carefully lift the POWER SUPPLY BOARD, slide it towards the front edge of the system unit to disconnect PJ4 from PJ9 on the SYSTEM BOARD and remove it from the system (FIGURE FOUR).
7) Refit the POWER SUPPLY BOARD in reverse order.

Hard Disk Drive

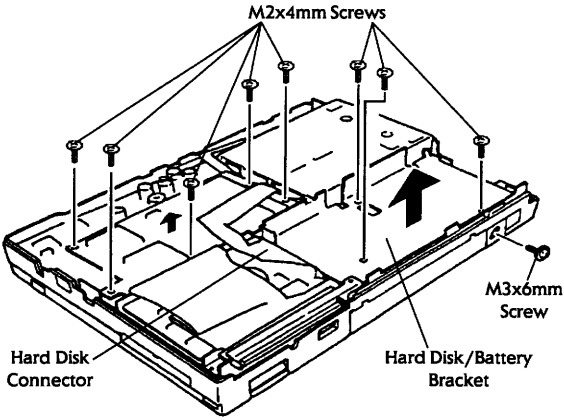

FIGURE FIVE

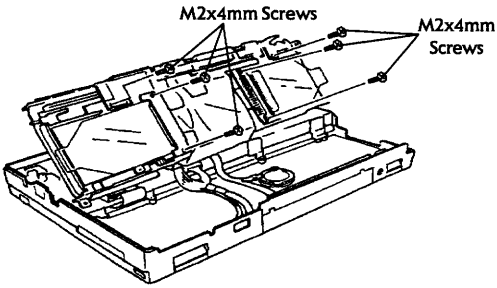

FIGURE SIX

1) Switch the T2200SX off and disconnect all interconnecting cables including the mains adapter.
2) Remove the BATTERY PACK as described earlier in this section.
3) Should they be installed, remove the JEIDA card and/or MEMORY CARD as described earlier in this section.
4) Follow all instructions as detailed under the disassembly procedures **Bottom Cover, Battery Terminals** and **Power Supply Board** before proceeding.
5) Remove the earthing screw (M3x6mm) located immediately next to the serial port (FIGURE FIVE).
6) Carefully disconnect the HARD DISK CONNECTOR by prising it away from the HARD DISK (FIGURE FIVE).
7) Remove the eight screws (M2x4mm) securing the HARD DISK/ BATTERY BRACKET and the top half of the SYSTEM BOARD into the system unit, noting that one screw also secures a grounding plate linking the two assemblies (FIGURE FIVE).

/continued/

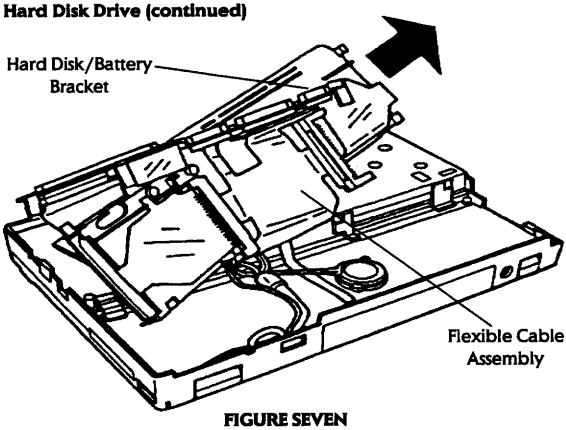

FIGURE SEVEN

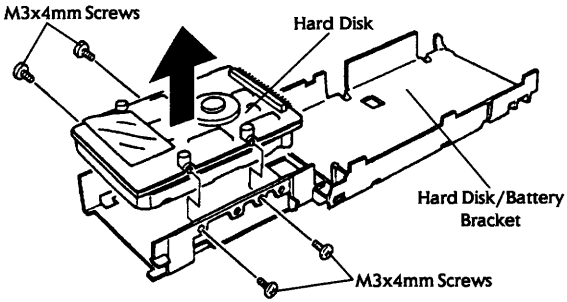

FIGURE EIGHT

8) Carefully lift the HARD DISK/BATTERY BRACKET out of the system unit and pivot it back towards the SYSTEM BOARD ensuring that it is adequately supported at all times (FIGURES FIVE and SIX overleaf).
9) While supporting the HARD DISK/BATTERY BRACKET, remove the six screws (M2x4mm) securing the JEIDA and memory slot connector assemblies noting the size and position of the sliding frames and their associated securing brackets (FIGURE SIX overleaf).
10) Carefully slide the HARD DISK/BATTERY BRACKET out of the system unit through the FLEXIBLE CABLE ASSEMBLY taking extreme care not to damage either the cables themselves or the pins on the JEIDA and memory slot connectors (FIGURE SEVEN).
11) Lay the SYSTEM BOARD over the front edge of the system ensuring that no adverse stresses are applied to its connecting cables.
12) Remove the four screws (M3x4mm) securing the HARD DISK/BATTERY BRACKET to the HARD DISK and remove the HARD DISK from it (FIGURE EIGHT).
13) Refit the HARD DISK DRIVE in reverse order ensuring that extreme care is taken to prevent either the cables or the connector pins becoming damaged when the HARD DISK/BATTERY BRACKET is relocated and that the grounding plate linking the HARD DISK/BATTERY BRACKET to the SYSTEM BOARD is correctly fitted .

Speaker and System Board

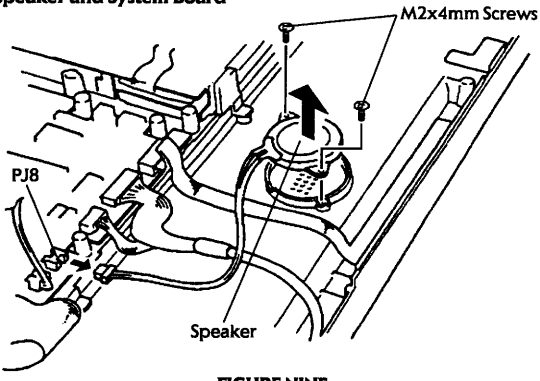

FIGURE NINE

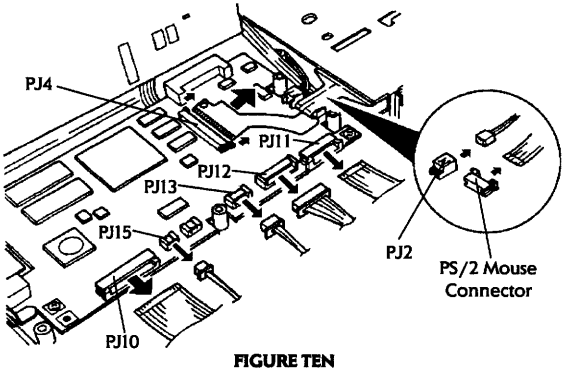

FIGURE TEN

1) Switch the T2200SX off and disconnect all interconnecting cables including the mains adapter.
2) Remove the BATTERY PACK as described earlier in this section.
3) Should they be installed, remove the JEIDA card and/or MEMORY CARD as described earlier in this section.
4) Follow all instructions as detailed under the disassembly procedures **Bottom Cover, Battery Terminals, Power Supply Board** and **Hard Disk Drive** before proceeding.
5) If present, peel back any tape securing the SPEAKER cable to the system unit and/or SYSTEM BOARD.
6) Remove the two screws (M2x4mm) securing the SPEAKER into the system unit (FIGURE NINE).
7) Unplug the SPEAKER from PJ8 and remove it from the system (FIGURE NINE).

/continued/

Speaker and System Board (continued)

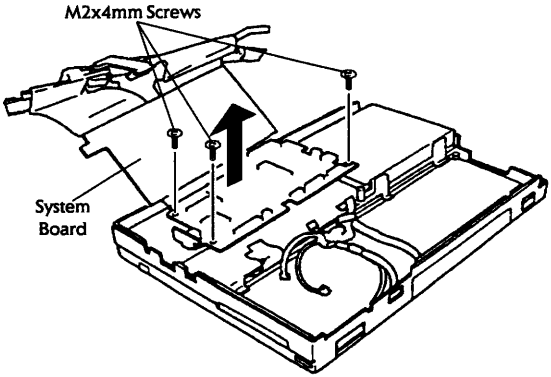

FIGURE ELEVEN

8) If present, peel back any tape securing the SYSTEM BOARD data cables to it and/or the system unit.
9) Release the locking pegs on ZIF socket PJ4 and carefully withdraw the floppy diskette cable from it (FIGURE TEN overleaf).
10) Release the locking pegs on ZIF socket PJ10 and carefully withdraw the keyboard cable from it (FIGURE TEN overleaf).
11) Release the locking pegs on ZIF socket PJ11 and carefully withdraw the LED cable from it (FIGURE TEN overleaf).
12) Release the locking pegs on the PS/2 MOUSE CONNECTOR and carefully withdraw the cable from it (FIGURE TEN overleaf).
13) Carefully unplug the cables from PJ2 (RTC battery), PJ12 and PJ13 (LCD cable) and PJ15 (panel close switch cable) (FIGURE TEN overleaf).
14) Remove the three screws (M2x4mm) securing the SYSTEM BOARD into the system unit (FIGURE ELEVEN).
15) Carefully lift the SYSTEM BOARD out of the system unit ensuring that it is adequately supported at all times to prevent any adverse stress being applied to the interconnecting cables (FIGURE ELEVEN).
16) Refit the SYSTEM BOARD and SPEAKER in reverse order ensuring that extreme care is taken to prevent the interconnecting cables on the SYSTEM BOARD from being unduly stressed.

RTC Battery, PS/2 Mouse Port and Floppy Diskette Drive

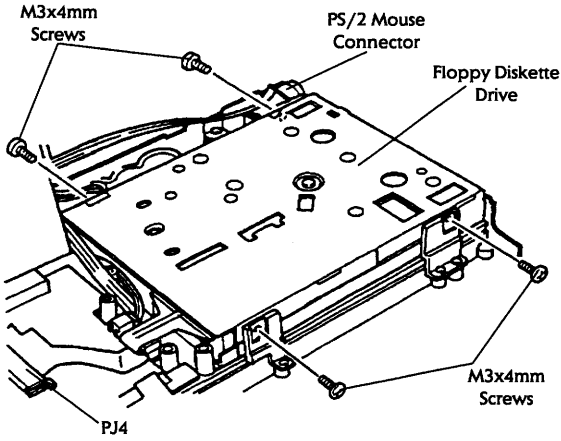

FIGURE TWELVE

1) Switch the T2200SX off and disconnect all interconnecting cables including the mains adapter.
2) Remove the BATTERY PACK as described earlier in this section.
3) Should they be installed, remove the JEIDA card and/or MEMORY CARD as described earlier in this section.
4) Follow all instructions as detailed under the disassembly procedures **Bottom Cover, Battery Terminals, Power Supply Board** and **Hard Disk Drive** (steps (1) through (8) and step (11)) before proceeding.
5) Unplug the RTC battery from PJ2 and remove it from the system.
6) Release the locking pegs on the PS/2 MOUSE CONNECTOR, withdraw the cable from it and lift the PS/2 MOUSE CONNECTOR out of the system (FIGURE TWELVE).
7) Release the locking pegs on the ZIF socket PJ4 and withdraw the floppy diskette cable from it (FIGURE TWELVE).
8) Remove the four screws (M3x4mm) securing the FLOPPY DISKETTE DRIVE into the system unit and lift it out (FIGURE TWELVE).
9) Refit the FLOPPY DISKETTE DRIVE, PS/2 MOUSE CONNECTOR and RTC battery in reverse order ensuring that all of the cables are routed correctly.

Keyboard

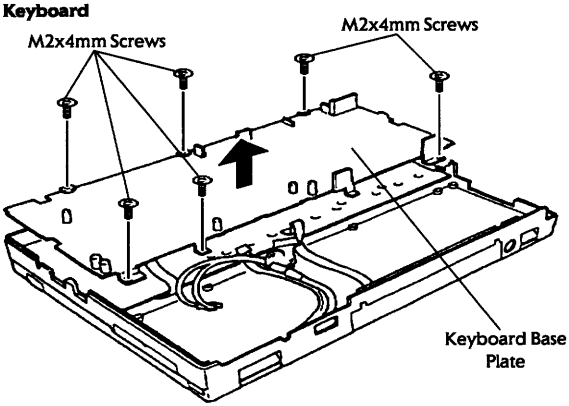

FIGURE THIRTEEN

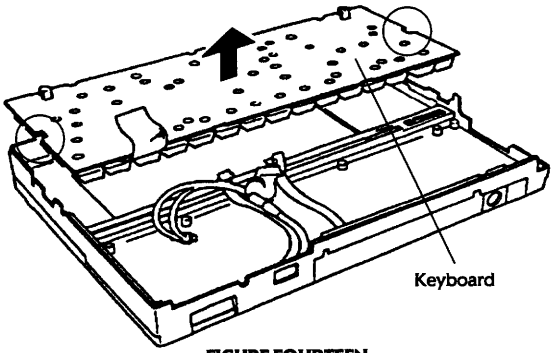

FIGURE FOURTEEN

1) Switch the T2200SX off and disconnect all interconnecting cables including the mains adapter.
2) Remove the BATTERY PACK as described earlier in this section.
3) Should they be installed, remove the JEIDA card and/or MEMORY CARD as described earlier in this section.
4) Follow all instructions as detailed under the disassembly procedures **Bottom Cover, Battery Terminals, Power Supply Board, Hard Disk Drive, Speaker and System Board** (excluding step (6) and the actual SPEAKER removal) and **RTC Battery, PS/2 Mouse Port and Floppy Diskette Drive** (excluding step (8)) before proceeding.
5) Remove the six screws (M2x4mm) securing the KEYBOARD BASE PLATE to the system unit and lift it out (FIGURE THIRTEEN).
6) Release the latches (circled) securing the KEYBOARD into the system unit and lift it out (FIGURE FOURTEEN).
7) Refit the KEYBOARD in reverse order.

FL Inverter and Display Module

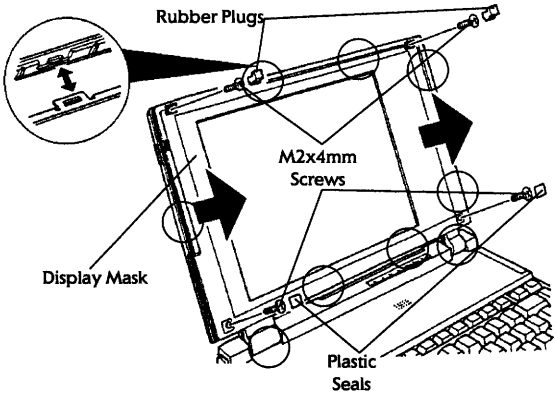

FIGURE FIFTEEN

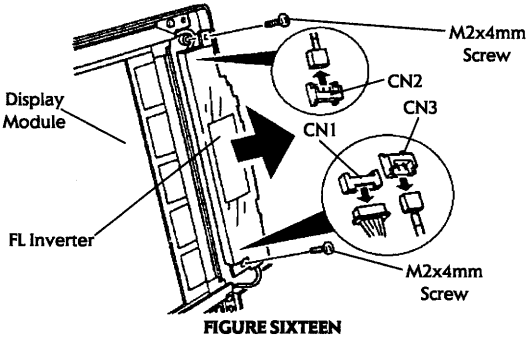

FIGURE SIXTEEN

1) Switch the T2200SX off and disconnect all interconnecting cables including the mains adapter.
2) Remove the BATTERY PACK as described earlier in this section.
3) Should they be installed, remove the JEIDA card and/or MEMORY CARD as described earlier in this section.
4) Remove the two RUBBER PLUGS from the top left and top right of the DISPLAY MASK and remove the two screws (M2x4mm) hidden underneath them (FIGURE FIFTEEN).
5) Remove the two PLASTIC SEALS from the bottom left and bottom right of the DISPLAY MASK and remove the two screws (M2x4mm) hidden underneath them (FIGURE FIFTEEN).
6) Starting with the top two, carefully release the nine latches (circled) securing the DISPLAY MASK to the top cover and remove it ensuring that neither display catch, which hold the clamshell together when the T2200SX is closed, obstructs the DISPLAY MASK and damages it. (FIGURE FIFTEEN).

/continued/

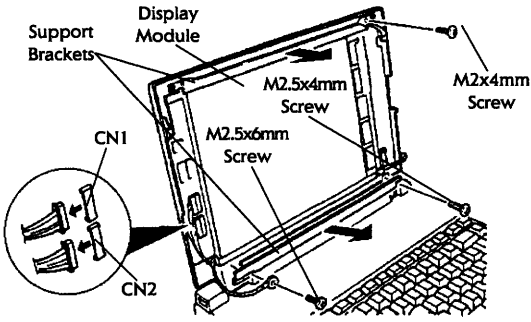

FIGURE SEVENTEEN

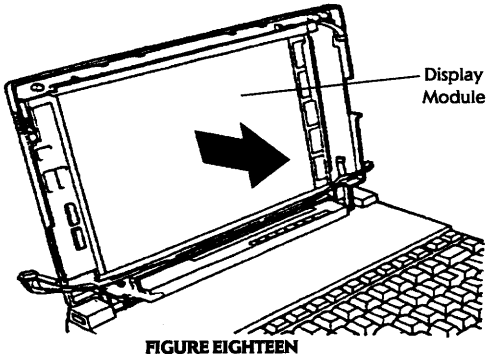

FIGURE EIGHTEEN

7) Remove the two screws (M2x4mm) securing the FL INVERTER and pivot it towards the DISPLAY MODULE (FIGURE SIXTEEN overleaf).
8) Disconnect the cables from CN1, CN2 and CN3 and remove the FL INVERTER from the top cover (FIGURE SIXTEEN overleaf)
9) Disconnect the display cables from CN1 and CN2 (FIGURE SEVENTEEN).
10) Remove the three screws (M2x4mm, M2.5x4mm and M2.5x6mm) securing the top and bottom SUPPORT BRACKETS and remove them from the top cover noting that the M2.5x6mm screw also secures a grounding wire (FIGURE SEVENTEEN).
11) Carefully lift the DISPLAY MODULE out of the top cover (FIGURE EIGHTEEN).
12) Refit the DISPLAY MODULE and FL INVERTER in reverse order ensuring that the interconnecting cables are routed correctly and that the grounding wire is attached to the top cover.

Real Mode Memory Map

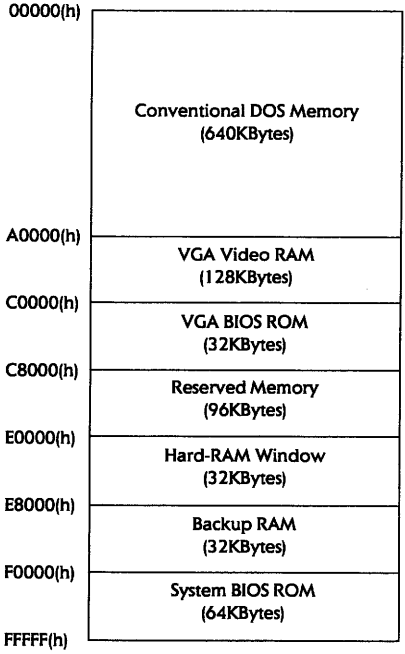

Interrupt Assignments

Interrupt Controller	Interrupt Level	Interrupt Assignment
-	NMI	RAM Parity Error, I/O Channel Error
1	0	Timer
	1	Keyboard
	2	Interrupt Controller for Levels 8 to 15
	3	COM2:
	4	COM1:
	5	Printer (LPT2:)
	6	Floppy Diskette Controller
	7	Printer (LPT1:)
2	8	Real Time Clock
	9	Software Redirect to INT 0A(h)
	10	Reserved
	11	Reserved
	12	PS/2 Mouse
	13	Math Co-Processor
	14	Hard Disk Controller
	15	Reserved

Direct Memory Access Assignments

DMA Controller	Channel Number	DMA Assignment
1	0	Not Used
	1	Reserved
	2	Floppy Diskette Drive
	3	Reserved
2	4	Cascade for DMA Controller One
	5	Reserved
	6	Reserved
	7	Not Used

Input/Output Port Assignments

I/O Port Address	Device/Function
000(h) to 01F(h)	82C37 - DMA Controller One
020(h) to 03F(h)	82C59 - Programmable Interrupt Controller One
040(h) to 05F(h)	82C54 - Timer
060(h) to 06F(h)	80C42 - Keyboard Controller
070(h)	NMI Mask Register
070(h) to 07F(h)	Real Time Clock
080(h) to 09F(h)	DMA Page Register
0A0(h) to 0BF(h)	82C59 - Programmable Interrupt Controller Two
0C0(h) to 0DF(h)	82C37 - DMA Controller Two
0E0(h) to 0EF(h)	Special Register
0F0(h) to 0F7(h)	Math Co-Processor
100(h) to 1EF(h)	VGA
1F0(h) to 1FF(h)	Hard Disk Controller
200(h) to 207(h)	Game Controller
208(h) to 20F(h)	Not Used
210(h) to 217(h)	Expansion Unit
218(h) to 277(h)	Not Used
278(h) to 27F(h)	Printer (LPT2:)
280(h) to 2F7(h)	Not Used
2F8(h) to 2FF(h)	COM2:
300(h) to 31F(h)	Prototype Card
320(h) to 32F(h)	Hard Disk Controller (XT Type)
330(h) to 337(h)	Not Used
338(h) to 33F(h)	COM3:
340(h) to 377(h)	Not Used
378(h) to 37F(h)	Printer (LPT1:)
380(h) to 38F(h)	2nd Bisynchronous Communications Port
390(h) to 39F(h)	Not Used
3A0(h) to 3AF(h)	1st Bisynchronous Communications Port
3B0(h) to 3BF(h)	Monochrome Display Adapter / Printer (LPT3:)
3C0(h) to 3DF(h)	CGA, EGA and VGA
3E0(h) to 3E7(h)	Not Used
3E8(h) to 3FF(h)	COM3:
3F0(h) to 3F7(h)	Floppy Diskette Controller
3F8(h) to 3FF(h)	COM1:

This page is intentionally left blank

T2400
Range

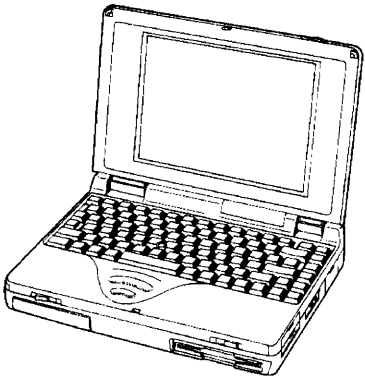

T2400 Notebook Range

Section Index

Product Specifications 198
Mains Adapter and Battery Specifications 198
Product Features 198
Battery Release Procedure 199
Upgrade Procedures 200
  Memory Expansion Cards 200
  PCMCIA Cards 202
  Sound Card 203
Setup Screen Layout 206
FN-HotKey Functions 208
Disassembly Procedures 209
  Keyboard 209
  RTC Battery and Top Cover Assembly 211
  PCMCIA Card Board 212
  Hard Disk Drive 213
  Floppy Diskette Drive 214
  Speaker, Backup Battery and Display Unit 215
  LED Board, Display Board and Memory Board 217
  System Board 219
  Display Mask 220
  Microphone 221
  FL Inverter (T2400CS) 222
  Display Module (T2400CS) 223
  FL Inverter (T2400CT) 224
  Display Module (T2400CT) 225
Real Mode Memory Map 226
Interrupt Assignments 227
Direct Memory Access Assignments 227
Input/Output Port Assignments 228

T2400 Notebook Range

Product Specifications

	T2400CS	T2400CT
Processor	i80486DX/2	i80486DX/2
Clock Speed	50MHz	50MHz
Standard Memory	4MBytes	8MBytes
Maximum Memory	20MBytes	24MBytes
Hard Disk Drive	250/320Mb	320Mb
Floppy Diskette Drive	1.44MBytes	1.44MBytes
Display Type	ASTN Colour	TFT Colour
Display Resolution	VGA/S-VGA	VGA/S-VGA
Display Colour Palette	256 Colours	65,536 Colours
Internal Modem Slot	Yes (PCMCIA)	Yes (PCMCIA)
Serial Port	Yes	Yes
Parallel Port	Yes	Yes
Monitor Port	Yes	Yes
PS/2 Mouse Port	Yes	Yes
PS/2 Keyboard Port	Yes	Yes
Keyboard Type	84-Keys	84-Keys
DeskStation Expansion	Port Replicator Only	Port Replicator Only
Maximum Battery Life	3.5 Hours	3.5 Hours
Weight (kg/lb)	2.95/6.5	2.95/6.5

Mains Adapter and Battery Specifications

Mains Adapter
Toshiba Part Number PA2430U
Output Rating 18 volts, 1.1 amps

Battery Pack
Toshiba Part Number PA2429U-R
Power Rating
2,600mA/hour, 12 volts DC

Product Features

* 3.3 Volt Processor Technology
* Processor Reset Button
* Resume Mode Provision
* Max-Time Power Management
* Advanced Power Management
* VESA Local Bus Graphics
* BitBlk Graphics Accelerator
* PCMCIA Type II Slot
* PCMCIA Type III Slot (14.5mm)
* Optional Sound System (SoundBlaster Pro Compatible)
* Integrated Microphone (With Sound System Only)
* AccuPoint Mouse
* 800x600x256 External S-VGA
* 1024x768x256 External S-VGA
* 65,536 Onscreen Colours (T2400CT Only)
* Kensington Cable Lock
* HotLock Security
* NiH_2 Battery
* Flash BIOS Firmware

Please refer to the Appendices at the back of this booklet for a description of some of the features described above

Battery Release Procedure

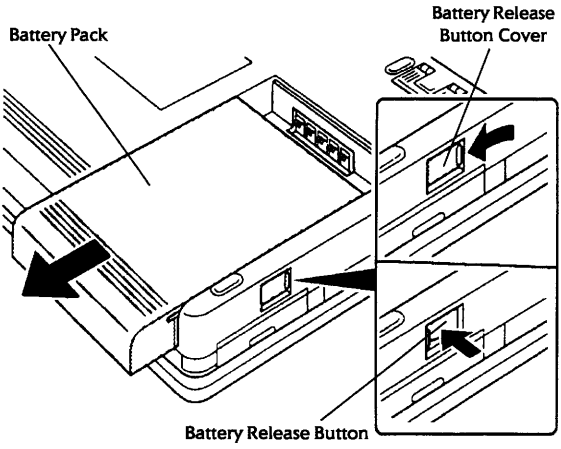

FIGURE ONE

1) Switch the T2400 off and disconnect all interconnecting cables including the mains adapter.
2) Turn the T2400 upside down and place it on a flat surface.
3) Slide the BATTERY RELEASE BUTTON COVER towards the front of the system and press the BATTERY RELEASE BUTTON located behind it (FIGURE ONE). The BATTERY PACK will pop out slightly.
4) Grasp the BATTERY PACK and remove it from the system (FIGURE ONE).
5) Refit the BATTERY PACK by sliding it back into the system, ensuring that it is locked firmly in place.

Memory Expansion Cards

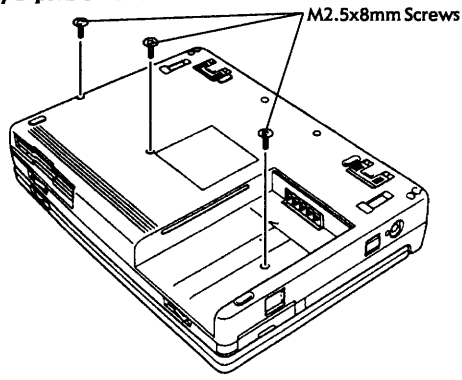

FIGURE ONE

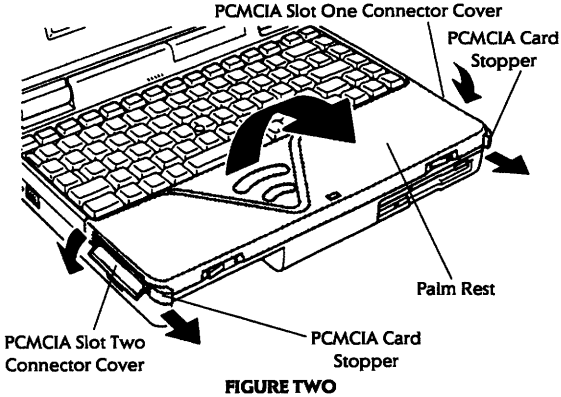

FIGURE TWO

1) Ensure the T2400 is configured to start in Boot Mode.
2) Remove the BATTERY PACK as described earlier in this section.
3) Switch the T2400 off and disconnect all interconnecting cables including the mains lead.
4) Turn the T2400 upside down and place it on a flat surface.
5) Remove the three screws (M2.5x8mm) securing the PALM REST to the bottom cover assembly (FIGURE ONE).
6) Turn the T2400 the right way up and open the screen.
7) Open the PCMCIA SLOT ONE CONNECTOR COVER and the PCMCIA SLOT TWO CONNECTOR COVER (FIGURE TWO).
8) Slide the left and right hand PCMCIA CARD STOPPERS towards the front of the system unit into their unlocked positions (FIGURE TWO).
9) Place your fingers inside the left and right hand PCMCIA slots, carefully lift the PALM REST from the base of the KEYBOARD and remove it from the system unit (FIGURE TWO).

/continued/

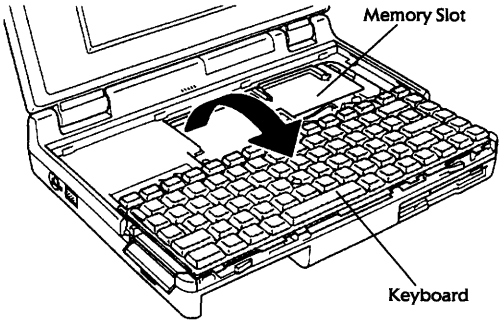

FIGURE THREE

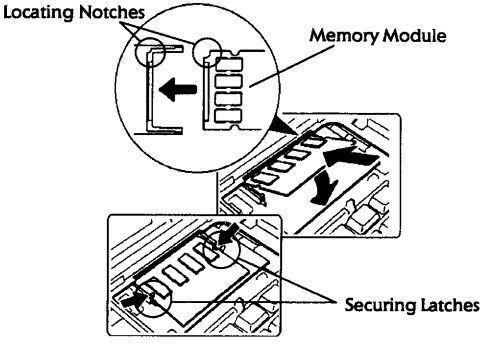

FIGURE FOUR

10) Lift the KEYBOARD out of the system unit, to expose the MEMORY SLOT at the rear right hand corner of the KEYBOARD cavity, and lay it on the space previously occupied by the PALM REST - there is no need to disconnect the KEYBOARD CABLE during this procedure (FIGURE THREE).
11) Insert the MEMORY MODULE ensuring that (a) it is seated correctly according to the LOCATING NOTCHES on both the card and the system unit, and (b) it is secured in place by the SECURING LATCHES at the left and right hand edges of the MEMORY SLOT (FIGURE FOUR).
12) Refit the KEYBOARD and PALM REST in reverse order ensuring that the KEYBOARD CABLE does not become trapped in any way.
13) Turn on the T2400. The system will automatically recognise the additional memory during the boot sequence.

CAUTION **Do not touch the connecting edge of the memory module as debris, oil or grease in or on this connector may cause memory access problems.**

PCMCIA Cards

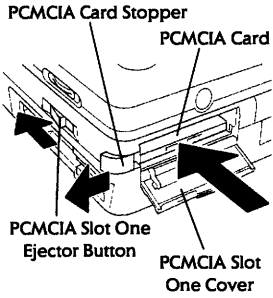

FIGURE ONE

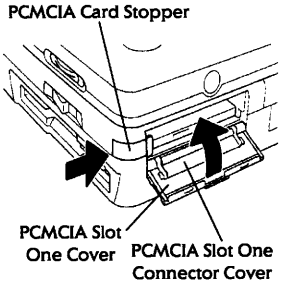

FIGURE TWO

1) Ensure the T2400 is configured to start in Boot Mode.
2) Switch the T2400 off and disconnect all interconnecting cables including the mains lead.
3) Turn the T2400 around so that its right hand side is towards you.
4) Open the PCMCIA SLOT ONE COVER and slide the PCMCIA CARD STOPPER towards the front of the system unit into its unlocked position (FIGURE ONE).
5) Insert the PCMCIA CARD ensuring that it is oriented correctly (FIGURE ONE).

5a) To remove the PCMCIA CARD ensure the PCMCIA SLOT ONE COVER is open and the PCMCIA CARD STOPPER is unlocked, then slide the PCMCIA SLOT ONE EJECTOR BUTTON towards the centre of the system unit (FIGURE ONE). The PCMCIA CARD will be partially ejected from the system allowing it to be grasped and completely removed.

6) Slide the PCMCIA CARD STOPPER towards the rear of the system unit into its locked position and close the PCMCIA SLOT ONE COVER (FIGURE TWO).
7) If the PCMCIA CARD requires an external interface, open the PCMCIA SLOT ONE CONNECTOR COVER within the PCMCIA SLOT ONE COVER as needed (FIGURE TWO).
8) Turn on the T2400. If required you may need to configure the PCMCIA card to operate correctly - refer to the manufacturer's documentation for details on how to achieve this.

Note 1:- The above information relates to PCMCIA Slot One on the right of the system unit. If you wish to install a card into PCMCIA Slot Two the procedures are identical but relate to the left hand side of the system unit.

Note 2:- If you are installing either a Type I (3.3mm) or a Type II (5.0mm) PCMCIA CARD you may insert it into either Slot One or Slot Two. If you are installing a Type III (10.5mm) PCMCIA CARD you may only insert it into Slot One.

CAUTION **Do not touch the connecting edge of the PCMCIA card as debris, oil or grease in or on this connector may cause access problems.**

Sound Card

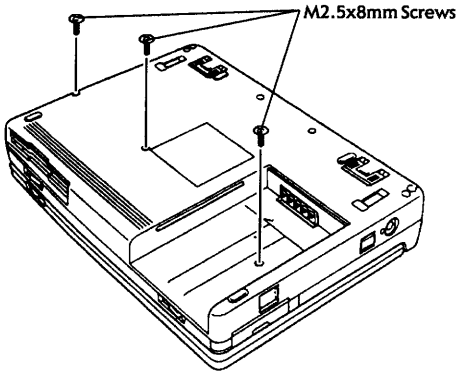

FIGURE ONE

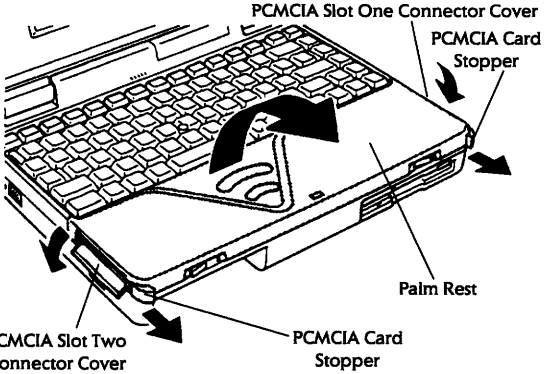

FIGURE TWO

1) Ensure the T2400 is configured to start in Boot Mode.
2) Remove the BATTERY PACK as described earlier in this section.
3) Switch the T2400 off and disconnect all interconnecting cables including the mains lead.
4) Turn the T2400 upside down and place it on a flat surface.
5) Remove the three screws (M2.5x8mm) securing the PALM REST to the bottom cover assembly (FIGURE ONE).
6) Turn the T2400 the right way up and open the screen.
7) Open the PCMCIA SLOT ONE CONNECTOR COVER and the PCMCIA SLOT TWO CONNECTOR COVER (FIGURE TWO).
8) Slide the left and right hand PCMCIA CARD STOPPERS towards the front of the system unit into their unlocked positions (FIGURE TWO).
9) Place your fingers inside the left and right hand PCMCIA slots, carefully lift the PALM REST from the base of the KEYBOARD and remove it from the system unit (FIGURE TWO).

/continued/

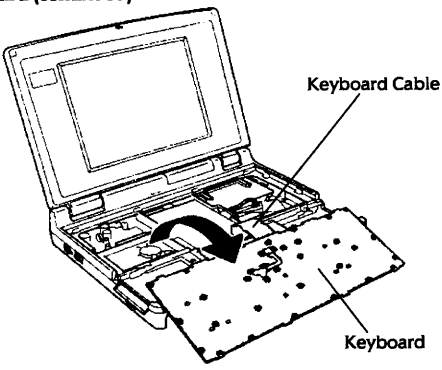

FIGURE THREE

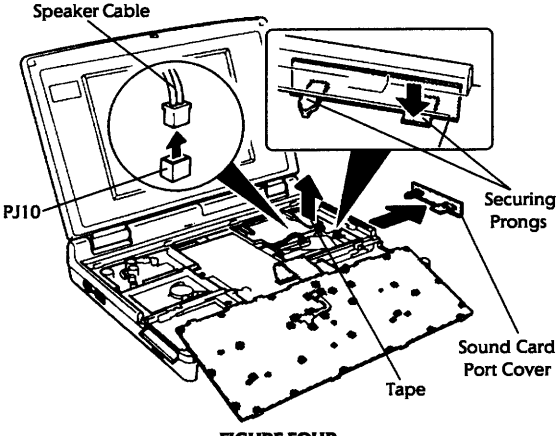

FIGURE FOUR

10) Pivot the KEYBOARD out of the front of the system unit, as indicated, to expose the SOUND CARD interface on the right hand side of the KEYBOARD cavity - there is no need to disconnect the KEYBOARD CABLE during this procedure (FIGURE THREE).
11) Carefully press down on the two SECURING PRONGS to release the SOUND CARD PORT COVER and remove it from the right hand side of the system unit (FIGURE FOUR).
12) Unplug the SPEAKER CABLE from PJ10 (FIGURE FOUR).
13) If required, and should it be present, peel back any TAPE that secures the MICROPHONE CABLE (FIGURE FOUR).

Note:- The MICROPHONE CABLE is that which is not plugged into the system unit.

/continued/

Sound Card (continued)

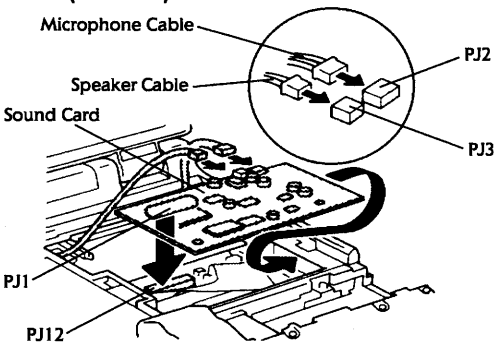

FIGURE FIVE

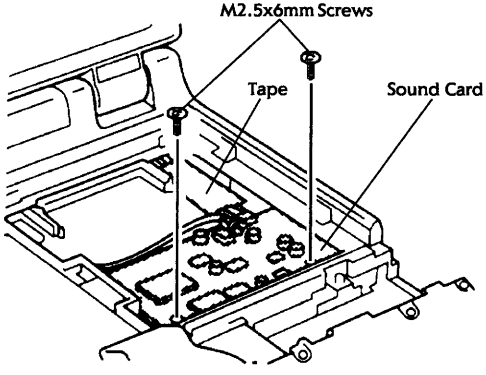

FIGURE SIX

14) Insert the right hand edge of the SOUND CARD into the sound port cavity beneath the top cover assembly and carefully press it down to connect PJ1 on the SOUND CARD to PJ12 on the SYSTEM BOARD (FIGURE FIVE).
15) Plug the MICROPHONE CABLE into PJ2 and the SPEAKER CABLE into PJ3 on the SOUND CARD (FIGURE FIVE).
16) Secure the SOUND CARD with the two screws (M2.5x6mm) supplied with it (FIGURE SIX).
17) If required, secure the MICROPHONE CABLE onto the system unit with TAPE (FIGURE SIX).
18) Refit the KEYBOARD and PALM REST in reverse order ensuring that the KEYBOARD CABLE does not become trapped in any way.
19) Turn on the T2400. If required you may need to configure the SOUND CARD to operate correctly through the machine's setup program. In addition you will need to load the Microsoft Windows drivers and utility programs that are provided with the SOUND CARD - refer to the supplied documentation for details on how to achieve this.

Setup Screen Layout

T2400CS (ASTN Colour Version)

SYSTEM SETUP — BIOS version = x.xx

MEMORY		COM/PRT/SCSI/SOUND	
Total	= 4096KB	Serial Port	= COM1(IRQ4/3F8H)
Base	= 640KB	Printer Port Type	= Output
Extended	= 3264KB	SCSI	= Enabled
Shadow BIOS ROM	= 192KB	Sound System	= Address/IRQ/DMA
DISPLAY		**PASSWORD**	
Display Adaptor	= VGA Compatible	Not Registered	
LCD Display Mode	= Color		
Ext. Scan Mode	= Interlace	**OTHERS**	
		Power-up Mode	= Boot
Power On Display	= Internal/External	CPU Cache	= Enabled
		Processing Speed	= High
BATTERY		Speaker Volume	= High
Battery Save Mode	= Full Power	Panel Power On/Off	= Disabled
Manual Set of Battery Level		Alarm Power On	= Disabled
	= ■■■■■■■F	Keyboard	= Layout/Fn
		Pointing Devices	= Auto-Selected
HARD DISK		Boot Priority	= FDD →HDD
Capacity	= 240MB		

↑↓←→: Select items, Space, BkSp : Change values
Esc: Exit without saving, Home: Set default values, End: Save changes and exit

Note 1:- The **Sound System** option is only diplayed when the SoundBlaster Pro compatible sound card is installed.

Note 2:- When selected, the **Sound System** option presents a sub-menu which affects the configuration of the installed sound card as follows:-

SOUND SYSTEM	
I/O Address	= 0220H
Interrupt Level	= IRQ7
DMA	= Channel 1

Note 3:- The **Panel Power On/Off** option only appears when the machine is configured to power-up in **Resume Mode.**

Note 4:- In addition to this basic setup screen information, there are a number of pre-configured settings associated with the **Battery Save Mode** option. When selected, these settings affect the way that the T2400CS manages its usage as follows:-

Low Power		Full Power	
CPU Sleep Mode	= Enabled	CPU Sleep Mode	= Disabled
Display Auto Off	= 03Min.	Display Auto Off	= Disabled
HDD Auto Off	= 03Min.	HDD Auto Off	= Disabled
System Auto Off*	= 30Min.	System Auto Off*	= Disabled

* The **System Auto Off** option is offered only when the host system is configured for **Resume Mode** operation.

T2400CS (ASTN Colour Version)

SYSTEM SETUP — BIOS version = x.xx

MEMORY		COM/PRT/SCSI/SOUND	
Total	= 8192KB	Serial Port	= COM1(IRQ4/3F8H)
Base	= 640KB	Printer Port Type	= Output
Extended	= 7360KB	SCSI	= Enabled
Shadow BIOS ROM	= 192KB	Sound System	= Address/IRQ/DMA
DISPLAY		**PASSWORD**	
Display Adaptor	= VGA Compatible	Not Registered	
LCD Display Mode	= Color		
Ext. Scan Mode	= Interlace	**OTHERS**	
LCD Display Colors	= 180K Colors	Power-up Mode	= Boot
Power On Display	= Internal/External	CPU Cache	= Enabled
		Processing Speed	= High
BATTERY		Speaker Volume	= High
Battery Save Mode	= Full Power	Panel Power On/Off	= Disabled
Manual Set of Battery Level		Alarm Power On	= Disabled
	= EEEEEEEEF	Keyboard	= Layout/Fn
		Pointing Devices	= Auto-Selected
HARD DISK		Boot Priority	= FDD →HDD
Capacity	= 320MB		

↑↓←→: Select Items, Space, BkSp : Change values
Esc: Exit without saving, Home: Set default values, End: Save changes and exit

Note 1:- The **Sound System** option is only diplayed when the SoundBlaster Pro compatible sound card is installed.

Note 2:- When selected, the **Sound System** option presents a sub-menu which affects the configuration of the installed sound card as follows:-

SOUND SYSTEM	
I/O Address	= 0220H
Interrupt Level	= IRQ7
DMA	= Channel 1

Note 3:- The **Panel Power On/Off** option only appears when the machine is configured to power-up in **Resume Mode.**

Note 4:- In addition to this basic setup screen information, there are a number of pre-configured settings associated with the **Battery Save Mode** option. When selected, these settings affect the way that the T2400CT manages its usage as follows:-

Low Power		Full Power	
CPU Sleep Mode	= Enabled	CPU Sleep Mode	= Disabled
Display Auto Off	= 03Min.	Display Auto Off	= 30Min.
HDD Auto Off	= 03Min.	HDD Auto Off	= Disabled
System Auto Off*	= 30Min.	System Auto Off*	= Disabled

* The **System Auto Off** option is offered only when the host system is configured for **Resume Mode** operation.

FN-HotKey Functions

The T2400 FN-HotKey functions allow the following configuration and setup changes to be made "on-the-fly":-

(FN + F1) - Instant Security

This HotKey combination will blank the T2400's display and lock all access to the keyboard until the correct password, as defined within the setup screen, is entered.

(FN + F2) - Power Save Mode

This HotKey combination will toggle between the T2400's two pre-defined power usage settings, low power and full power, and the user's own power usage configuration.

(FN + F3) - Resume/Boot Mode

This HotKey combination will toggle between Resume Mode and standard Boot mode.

(FN + F4) - Speaker Volume

This HotKey combination will toggle the T2400's internal speaker between its disabled, high, medium and low settings.

(FN + F5) - Select Active Display

This HotKey combination will toggle the T2400 between displaying the video image on the internal screen, external monitor or both simultaneously.

(FN + F10) - Select Cursor Mode

This HotKey combination activates the T2400's overlaid numeric keypad to operate as if it were a cursor pad.

(FN + F11) - Select Numeric Mode

This HotKey combination activates the T2400's overlaid numeric keypad to operate in its native numeric mode.

(FN + F12) - Scroll Lock Mode

This HotKey combination toggles Scroll Lock on and off.

Keyboard

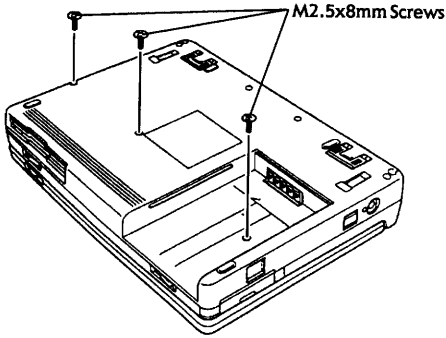

FIGURE ONE

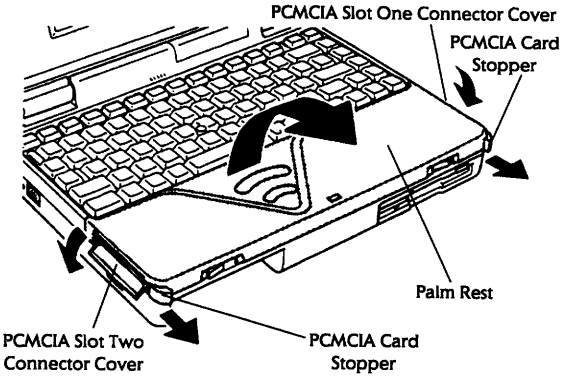

FIGURE TWO

1) Switch the T2400 off and disconnect all interconnecting cables including the mains adapter.
2) Remove the BATTERY PACK as described earlier in this section.
3) Should they be installed, remove any PCMCIA cards as described earlier in this section.
4) Turn the T2400 upside down and place it on a flat surface.
5) Remove the three screws (M2.5x8mm) securing the PALM REST to the bottom cover assembly (FIGURE ONE).
6) Turn the T2400 the right way up and open the screen.
7) Open the PCMCIA SLOT ONE CONNECTOR COVER and the PCMCIA SLOT TWO CONNECTOR COVER (FIGURE TWO).
8) Slide the left and right hand PCMCIA CARD STOPPERS towards the front of the system unit into their unlocked positions (FIGURE TWO).
9) Place your fingers inside the left and right hand PCMCIA slots, carefully lift the PALM REST from the base of the KEYBOARD and remove it from the system unit (FIGURE TWO).

/continued/

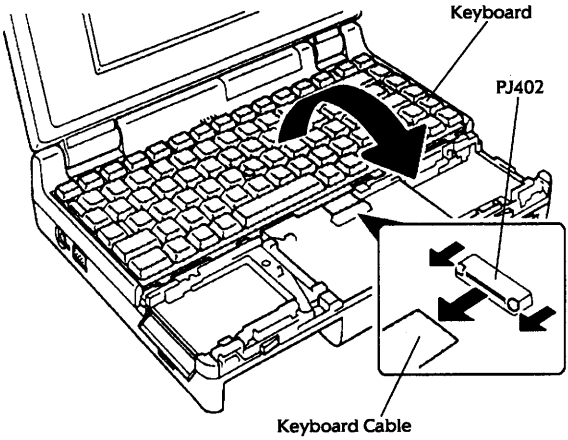

FIGURE THREE

10) Carefully lift up the KEYBOARD to fully expose the KEYBOARD CABLE connector PJ402 (FIGURE THREE).
11) Carefully release the locking pegs on ZIF connector PJ402, withdraw the KEYBOARD CABLE from within it and remove the KEYBOARD from the system (FIGURE THREE).
12) Refit the KEYBOARD in reverse order ensuring that the KEYBOARD CABLE does not become trapped in any way beneath either the KEYBOARD or the PALM REST.

RTC Battery and Top Cover Assembly

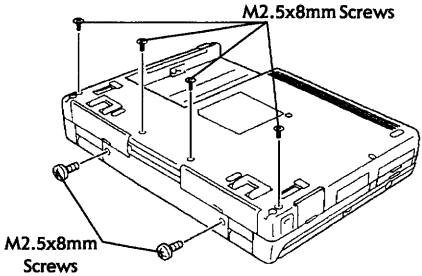

FIGURE FOUR

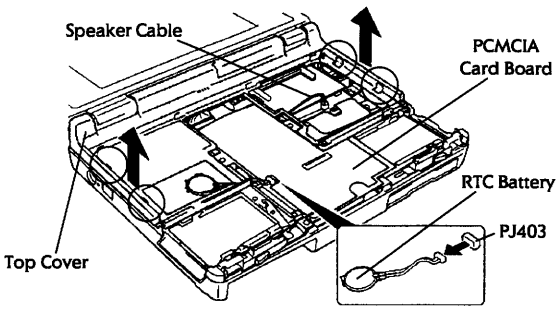

FIGURE FIVE

1) Switch the T2400 off and disconnect all interconnecting cables including the mains adapter.
2) Remove the BATTERY PACK as described earlier in this section.
3) Should they be installed, remove any PCMCIA cards as described earlier in this section.
4) Follow all instructions as detailed under the disassembly procedure **Keyboard** before proceeding.
5) Should they be installed, remove the MEMORY CARD and/or the SOUND CARD as described earlier in this section.
6) Turn the T2400 upside down and place it on a flat surface.
7) Remove the six screws (M2.5x8mm) securing the TOP COVER as indicated (FIGURE FOUR).
8) Turn the T2400 the right way up and open the screen as far back, horizontally, as it will go.
9) Unplug the RTC BATTERY from PJ403 on the PCMCIA CARD BOARD, carefully unhook the RTC BATTERY cable from its locating clips on the TOP COVER assembly and lift the RTC BATTERY out of the system unit (FIGURE FIVE).
10) Carefully unhook the SPEAKER CABLE from its locating clips on the TOP COVER assembly (FIGURE FIVE).
11) Carefully release the four latches (circled) securing the TOP COVER and lift it away from the system unit (FIGURE FIVE).
12) Refit the TOP COVER and RTC BATTERY in reverse order ensuring that the SPEAKER CABLE and RTC BATTERY cable are correctly seated in their respective locating clips.

PCMCIA Card Board

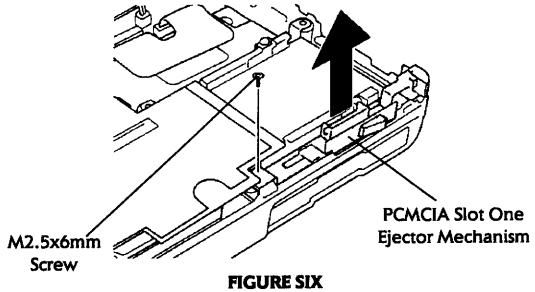

FIGURE SIX

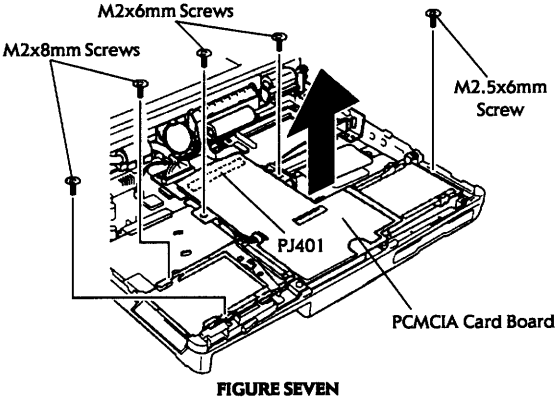

FIGURE SEVEN

1) Switch the T2400 off and disconnect all interconnecting cables including the mains adapter.
2) Remove the BATTERY PACK as described earlier in this section.
3) Should they be installed, remove any PCMCIA cards as described earlier in this section.
4) Follow all instructions as detailed under the disassembly procedures **Keyboard** and **RTC Battery and Top Cover Assembly** before proceeding.
5) Remove the screw (M2.5x6mm) securing the PCMCIA SLOT ONE EJECTOR MECHANISM and lift it out of the system unit noting how the pin on its underside locates within the ejector mechanism on the PCMCIA CARD BOARD (FIGURE SIX).
6) Remove the five screws (M2x6mm, M2x8mm and M2.5x6mm) securing the PCMCIA CARD BOARD (FIGURE SEVEN).
7) Lift the PCMCIA CARD BOARD out of the system unit, unplugging connector PJ401 at its rear edge, noting how the left hand PCMCIA ejector mechanism is positioned and located (FIGURE SEVEN).
8) Refit the PCMCIA CARD BOARD in reverse order ensuring that (a) connector PJ401 is firmly pressed down to properly connect it to the SYSTEM BOARD, (b) both PCMCIA card ejector mechanisms are replaced correctly and are fully operational, and (c) neither of the PCMCIA SLOT CONNECTOR COVERS is trapped beneath it.

Hard Disk Drive

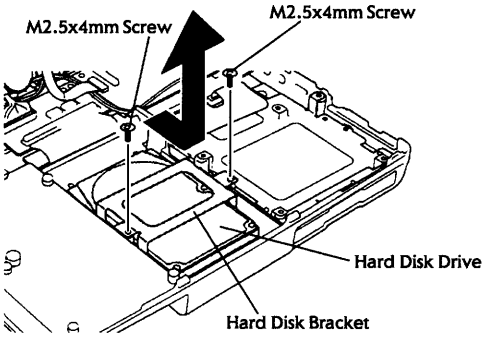

FIGURE EIGHT

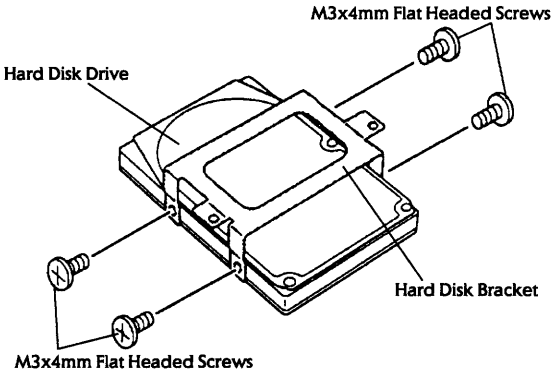

FIGURE NINE

1) Switch the T2400 off and disconnect all interconnecting cables including the mains adapter.
2) Remove the BATTERY PACK as described earlier in this section.
3) Should they be installed, remove any PCMCIA cards as described earlier in this section.
4) Follow all instructions as detailed under the disassembly procedures **Keyboard, RTC Battery and Top Cover Assembly** and **PCMCIA Card Board** before proceeding.
5) Remove the two screws (M2.5x4mm) securing the HARD DISK BRACKET into the system unit (FIGURE EIGHT).
6) Slide the HARD DISK BRACKET/HARD DISK DRIVE assembly towards the front of the computer to disconnect it from the SYSTEM BOARD, and lift it out of the system unit (FIGURE EIGHT).
7) Remove the four screws (M3x4mm Flat Headed) securing the HARD DISK BRACKET to the HARD DISK DRIVE and remove the HARD DISK DRIVE from it (FIGURE NINE).
8) Refit the HARD DISK DRIVE in reverse order.

Floppy Diskette Drive

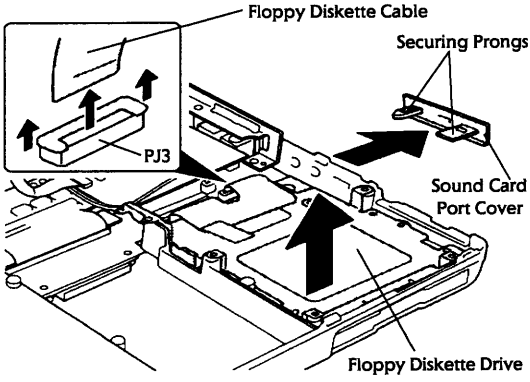

FIGURE TEN

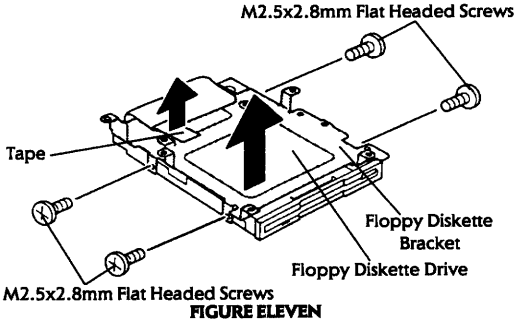

FIGURE ELEVEN

1) Switch the T2400 off and disconnect all interconnecting cables including the mains adapter.
2) Remove the BATTERY PACK as described earlier in this section.
3) Should they be installed, remove any PCMCIA cards as described earlier in this section.
4) Follow all instructions as detailed under the disassembly procedures **Keyboard, RTC Battery and Top Cover Assembly** and **PCMCIA Card Board** before proceeding.
5) Carefully press down on the two SECURING PRONGS to release the SOUND CARD PORT COVER and remove it from the right hand side of the system unit (FIGURE TEN).
6) Carefully release the locking pegs on ZIF connector PJ3, withdraw the FLOPPY DISKETTE CABLE from within it and lift the FLOPPY DISKETTE DRIVE out of the system (FIGURE TEN).
7) If present, remove any TAPE securing the FLOPPY DISKETTE CABLE to the FLOPPY DISKETTE BRACKET (FIGURE ELEVEN).
8) Remove the four screws (M2.5x2.8mm Flat Headed) securing the FLOPPY DISKETTE BRACKET to the FLOPPY DISKETTE DRIVE and remove the FLOPPY DISKETTE DRIVE from it (FIGURE ELEVEN).
9) Refit the FLOPPY DISKETTE DRIVE in reverse order.

Speaker, Backup Battery and Display Unit

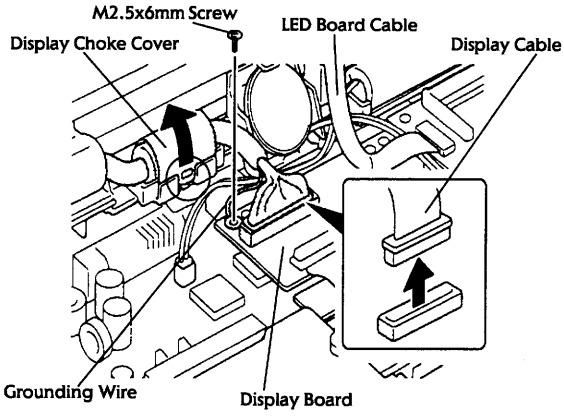

FIGURE TWELVE

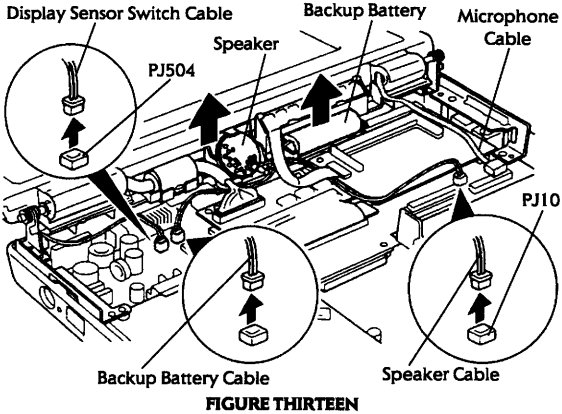

FIGURE THIRTEEN

1) Switch the T2400 off and disconnect all interconnecting cables including the mains adapter.
2) Remove the BATTERY PACK as described earlier in this section.
3) Should they be installed, remove any PCMCIA cards as described earlier in this section.
4) Follow all instructions as detailed under the disassembly procedures **Keyboard** and **RTC Battery and Top Cover Assembly** before proceeding.
5) Remove the screw (M2.5x6mm) securing the display unit's GROUNDING WIRE to the DISPLAY BOARD (FIGURE TWELVE).
6) Carefully unplug the DISPLAY CABLE from the DISPLAY BOARD (FIGURE TWELVE).

/continued/

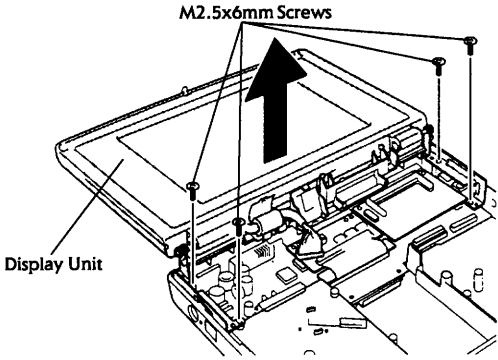

FIGURE FOURTEEN

7) Carefully release the clear plastic DISPLAY CHOKE COVER from its single securing latch (circled) to free the DISPLAY CABLE (FIGURE TWELVE overleaf).
8) Unplug the SPEAKER CABLE from PJ10 on the SYSTEM BOARD (FIGURE THIRTEEN overleaf).
9) Carefully unclip the SPEAKER from its housing and remove it from the system unit noting that the SPEAKER CABLE runs behind the LED BOARD CABLE (FIGURE THIRTEEN overleaf).
10) Carefully unplug the BACKUP BATTERY CABLE from the SYSTEM BOARD (FIGURE THIRTEEN overleaf).
11) Carefully unclip the BACKUP BATTERY from its housing and remove it from the system unit noting that the BACKUP BATTERY CABLE (a) runs behind the LED BOARD CABLE, and (b) is located within a securing clip on the housing for the DISPLAY CABLE choke (FIGURE THIRTEEN overleaf).
12) Carefully unplug the DISPLAY SENSOR SWITCH CABLE from PJ504 on the SYSTEM BOARD (FIGURE THIRTEEN overleaf).
13) If present, remove any tape securing the MICROPHONE CABLE to the MEMORY BOARD (FIGURE THIRTEEN overleaf).
14) Remove the four screws (M2.5x6mm) securing the DISPLAY UNIT and lift it vertically out of the system unit (FIGURE FOURTEEN).
15) Refit the DISPLAY UNIT, BACKUP BATTERY and SPEAKER in reverse order ensuring that (a) the BACKUP BATTERY CABLE is routed behind the LED BOARD CABLE and is located within the securing clip on the DISPLAY CABLE choke housing, (b) the SPEAKER CABLE is routed behind the LED BOARD CABLE, and (c) the clear plastic DISPLAY CHOKE COVER is correctly located on its securing latch.

LED Board, Display Board and Memory Board

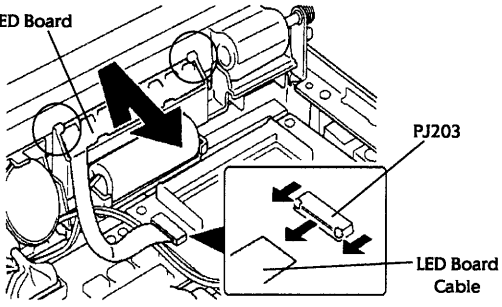

FIGURE FIFTEEN

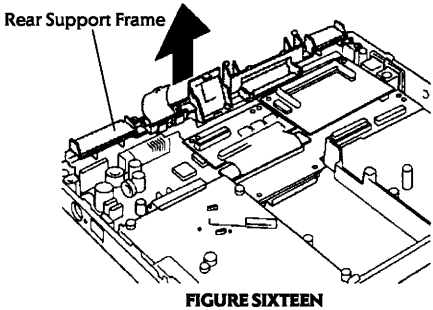

FIGURE SIXTEEN

1) Switch the T2400 off and disconnect all interconnecting cables including the mains adapter.
2) Remove the BATTERY PACK as described earlier in this section.
3) Should they be installed, remove any PCMCIA cards as described earlier in this section.
4) **If removing the LED Board only**

   It is necessary to follow all instructions as detailed under the disassembly procedures **Keyboard** and **RTC Battery and Top Cover Assembly** before proceeding.

   If removing the Memory Board and/or Display Board

   It is necessary to follow all instructions as detailed under the disassembly procedures **Keyboard, RTC Battery and Top Cover Assembly** and **PCMCIA Card Board** before proceeding. It is also advisable to perform the additional disassembly procedure **Speaker, Backup Battery and Display Unit** to ensure the DISPLAY BOARD is fully accessable.
5) If present, remove any tape securing the LED BOARD CABLE to the DISPLAY BOARD.
6) Carefully release the locking pegs on ZIF connector PJ203 and withdraw the LED BOARD CABLE from within it (FIGURE FIFTEEN).
7) Carefully prise the two securing latches (circled) apart to release the LED BOARD and lift it out of the system unit (FIGURE FIFTEEN).

/continued/

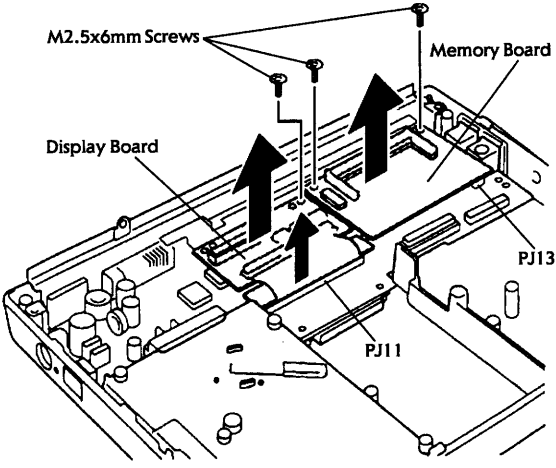

FIGURE SEVENTEEN

8) Slide the REAR SUPPORT FRAME vertically out of the system unit noting that it may be partially restained by two screw through-holes on the rear panel (FIGURE SIXTEEN overleaf).
9) Remove the two screws (M2.5x6mm) securing the MEMORY BOARD at its left and right hand corners (FIGURE SEVENTEEN).
10) Lift the right hand edge of the MEMORY BOARD, to disconnect its connector PJ202 from PJ13 on the SYSTEM BOARD, and remove it from the system unit (FIGURE SEVENTEEN).
11) Remove the screw (M2.5x6mm) securing the DISPLAY BOARD at its right hand corner (FIGURE SEVENTEEN).
12) Lift the rear edge of the DISPLAY BOARD, pivot it forward and lift out the metal frame exposed underneath it (FIGURE SEVENTEEN).

Note:- When replacing the metal frame for the DISPLAY BOARD the protruding metal tongue should be positioned at its bottom right hand corner, immediately next to PJ12.

13) Disconnect the DISPLAY BOARD from PJ11 on the SYSTEM BOARD and remove it from the system unit (FIGURE SEVENTEEN).
14) Refit the DISPLAY BOARD, MEMORY BOARD and LED BOARD in reverse order.

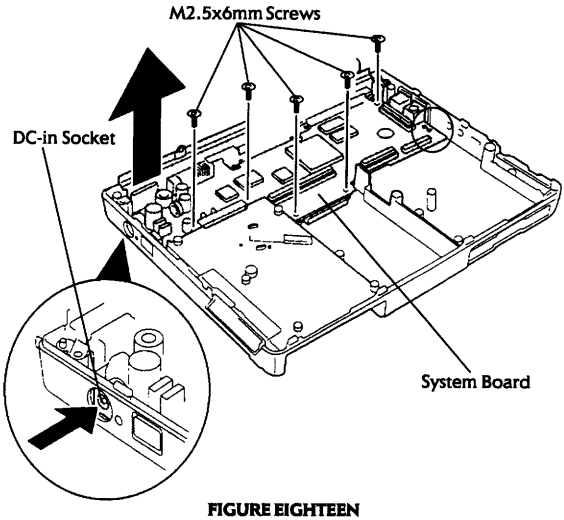

FIGURE EIGHTEEN

1) Switch the T2400 off and disconnect all interconnecting cables including the mains adapter.
2) Remove the BATTERY PACK as described earlier in this section.
3) Should they be installed, remove any PCMCIA cards as described earlier in this section.
4) Follow all instructions as detailed under the disassembly procedures **Keyboard, RTC Battery and Top Cover Assembly, PCMCIA Card Board, Hard Disk Drive, Floppy Diskette Drive, Speaker, Backup Battery and Display Unit** and **LED Board, Display Board and Memory Board** before proceeding.
5) Remove the five screws (M2.5x6mm) securing the SYSTEM BOARD (FIGURE EIGHTEEN).
6) Carefully press the DC-IN SOCKET in order to release it from its access recess within the left hand edge of the case (FIGURE EIGHTEEN).
7) Lift the SYSTEM BOARD out of the system unit noting that it is held in place by a locating peg (circled) at its right hand edge (FIGURE EIGHTEEN).
8) Refit the SYSTEM BOARD in reverse order.

Display Mask

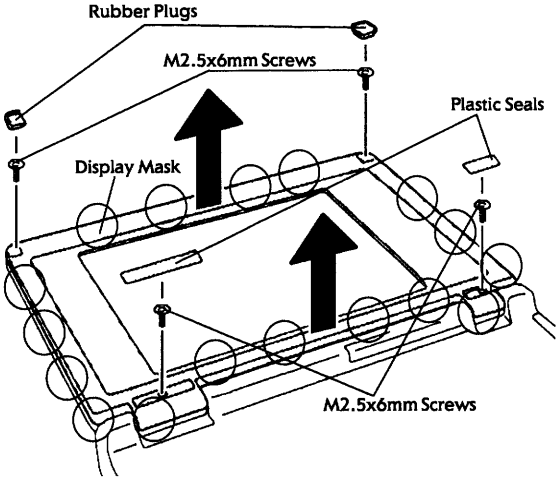

FIGURE NINETEEN

1) Switch the T2400 off and disconnect all interconnecting cables including the mains adapter.
2) Remove the BATTERY PACK as described earlier in this section.
3) Remove the two RUBBER PLUGS from the top left and top right of the DISPLAY MASK and remove the two screws (M2.5x6mm) hidden underneath them (FIGURE NINETEEN).
4) Remove the two PLASTIC SEALS from the left and right hinge arms of the DISPLAY MASK and remove the two screws (M2.5x6mm) hidden underneath them (FIGURE NINETEEN).

   Note:- When replacing the left hand PLASTIC SEAL ensure that the holed grid for the MICROPHONE is positioned nearest the centre of the system unit.

5) Starting with the top four, carefully release the seventeen latches (circled) securing the DISPLAY MASK to the DISPLAY UNIT and remove it ensuring that the display catch, which holds the clamshell together when the T2400 is closed, do not obstruct the DISPLAY MASK and damage it (FIGURE NINETEEN).
6) Refit the DISPLAY MASK in reverse order taking care to ensure that the MICROPHONE CABLE does not become trapped and that all the latches are snapped together correctly.

Microphone

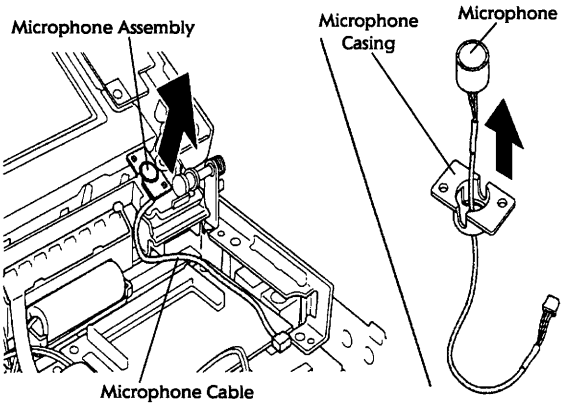

FIGURE TWENTY

1) Switch the T2400 off and disconnect all interconnecting cables including the mains adapter.
2) Remove the BATTERY PACK as described earlier in this section.
3) Should they be installed, remove any PCMCIA cards as described earlier in this section.
4) Follow all instructions as detailed under the disassembly procedures **Keyboard, RTC Battery and Top Cover Assembly** and **Display Mask** before proceeding.
5) If present, remove any tape securing the MICROPHONE CABLE to the MEMORY BOARD (FIGURE TWENTY).
6) Lift the compete MICROPHONE ASSEMBLY out of the DISPLAY UNIT (FIGURE TWENTY).
7) Remove the MICROPHONE from the MICROPHONE CASING noting how the MICROPHONE CABLE is routed (FIGURE TWENTY).
8) Refit the MICROPHONE in reverse order ensuring the MICROPHONE CABLE is routed correctly and that it is secured to the top of the MEMORY BOARD with tape.

FL Inverter (T2400CS)

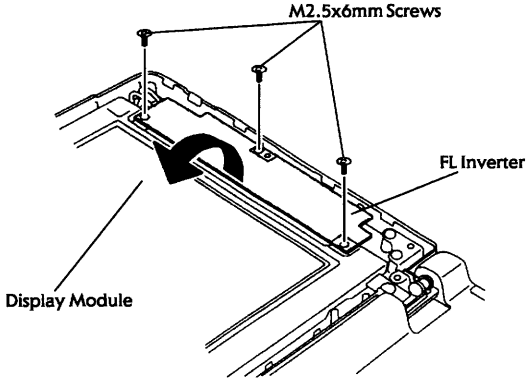

FIGURE TWENTY ONE

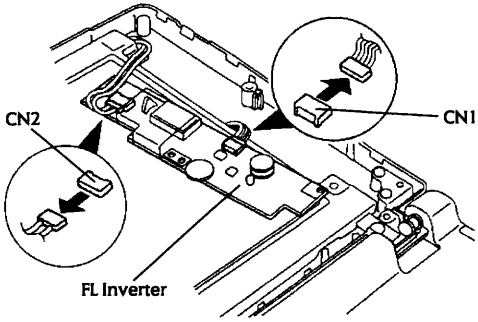

FIGURE TWENTY TWO

1) Switch the T2400 off and disconnect all interconnecting cables including the mains adapter.
2) Remove the BATTERY PACK as described earlier in this section.
3) Should they be installed, remove any PCMCIA cards as described earlier in this section.
4) Follow all instructions as detailed under the disassembly procedure **Display Mask** before proceeding.
5) Remove the three screws (M2.5x6mm) securing the FL INVERTER to the display assembly and carefully pivot it over to lie on the DISPLAY MODULE taking care not to catch the contrast wheel (FIGURE TWENTY ONE).
6) Disconnect the FL INVERTER cable from CN1, the fluorescent lamp cable from CN2 and remove the FL INVERTER from the display assembly (FIGURE TWENTY TWO).
7) Refit the FL INVERTER in reverse order.

Display Module (T2400CS)

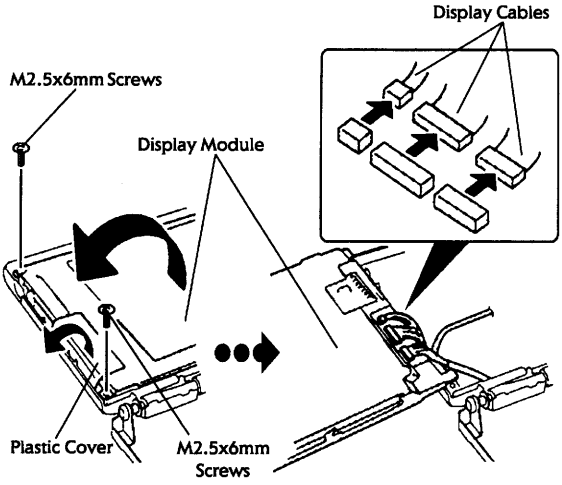

FIGURE TWENTY THREE

1) Switch the T2400 off and disconnect all interconnecting cables including the mains adapter.
2) Remove the BATTERY PACK as described earlier in this section.
3) Should they be installed, remove any PCMCIA cards as described earlier in this section.
4) Follow all instructions as detailed under the disassembly procedures **Display Mask** and **FL Inverter (T2400CS)** before proceeding.
5) Remove the two screws (M2.5x6mm) securing the DISPLAY MODULE (FIGURE TWENTY THREE).
6) Carefully pivot the DISPLAY MODULE out of the display assembly as indicated, noting the position of the clear PLASTIC COVER, to expose the three DISPLAY CABLES on its underside (FIGURE TWENTY THREE).
7) Disconnect the three DISPLAY CABLES from the back of the DISPLAY MODULE and remove it from the display assembly (FIGURE TWENTY THREE).
8) Refit the DISPLAY MODULE in reverse order ensuring that the PLASTIC COVER surrounding the DISPLAY CABLES is positioned correctly.

FL Inverter (T2400CT)

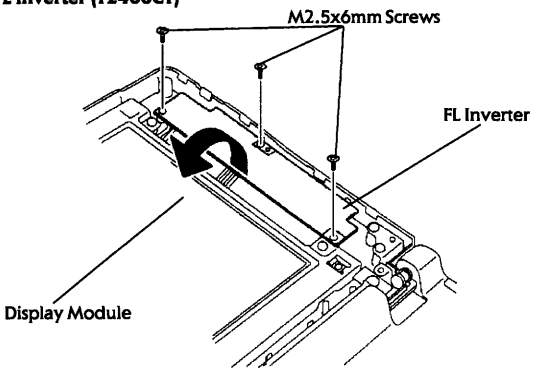

FIGURE TWENTY FOUR

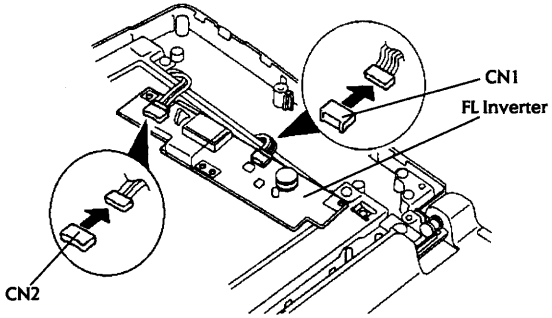

FIGURE TWENTY FIVE

1) Switch the T2400 off and disconnect all interconnecting cables including the mains adapter.
2) Remove the BATTERY PACK as described earlier in this section.
3) Should they be installed, remove any PCMCIA cards as described earlier in this section.
4) Follow all instructions as detailed under the disassembly procedure **Display Mask** before proceeding.
5) Remove the three screws (M2.5x6mm) securing the FL INVERTER to the display assembly and carefully pivot it over to lie on the DISPLAY MODULE (FIGURE TWENTY FOUR).
6) Disconnect the FL INVERTER cable from CN1, the fluorescent lamp cable from CN2 and remove the FL INVERTER from the display assembly (FIGURE TWENTY FIVE).
7) Refit the FL INVERTER in reverse order.

Display Module (T2400CT)

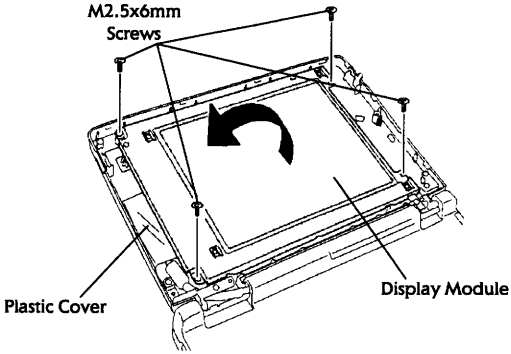

FIGURE TWENTY SIX

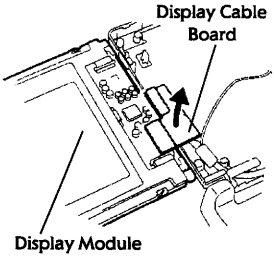

FIGURE TWENTY SEVEN

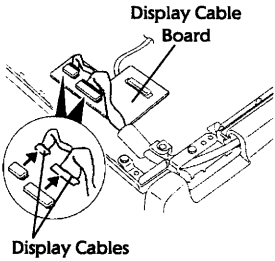

FIGURE TWENTY EIGHT

1) Switch the T2400 off and disconnect all interconnecting cables including the mains adapter.
2) Remove the BATTERY PACK as described earlier in this section.
3) Should they be installed, remove any PCMCIA cards as described earlier in this section.
4) Follow all instructions as detailed under the disassembly procedures **Display Mask** and **FL Inverter (T2400CT)** before proceeding.
5) If present, peel back any tape securing the clear PLASTIC COVER to the DISPLAY MODULE (FIGURE TWENTY SIX).
6) Remove the four screws (M2.5x6mm) securing the DISPLAY MODULE (FIGURE TWENTY SIX).
7) Carefully pivot the DISPLAY MODULE out of the display assembly as indicated to expose the DISPLAY CABLES/DISPLAY CABLE BOARD assembly on its underside (FIGURE TWENTY SIX).
8) Disconnect the DISPLAY CABLE BOARD from CN1 on the back of the DISPLAY MODULE and remove the DISPLAY MODULE from the display assembly (FIGURE TWENTY SEVEN).
9) If required, disconnect the two DISPLAY CABLES from PJ2 and PJ3 on the DISPLAY CABLE BOARD and remove the DISPLAY CABLE BOARD from the display assembly (FIGURE TWENTY SEVEN).
9) Refit the DISPLAY CABLE BOARD and DISPLAY MODULE in reverse order.

Real Mode Memory Map

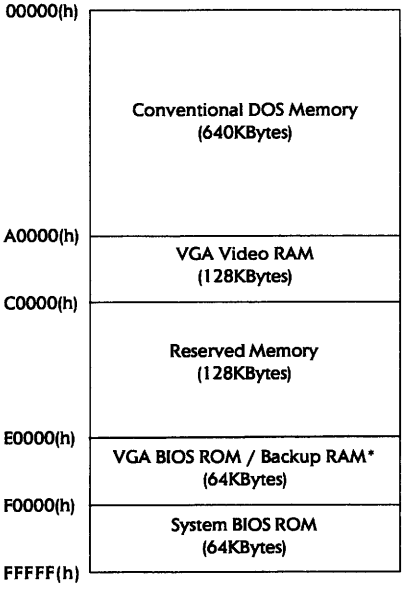

* The VGA BIOS ROM and the Backup RAM occupy the E0000(h) to F0000(h) memory segment.

Interrupt Assignments

Interrupt Controller	Interrupt Level	Interrupt Assignment
-	NMI	RAM Parity Error, I/O Channel Error
1	0	Timer
	1	Keyboard
	2	Interrupt Controller for Levels 8 to 15
	3	COM2:
	4	COM1:
	5	Printer (LPT2:) / Sound System*
	6	Floppy Diskette Controller
	7	Printer (LPT1:) / Sound System*
2	8	Real Time Clock
	9	Sound System* / SCSI**
	10	Sound System* / SCSI**
	11	SCSI**
	12	PS/2 Mouse
	13	Math Co-Processor
	14	Hard Disk Controller
	15	Reserved

* The SoundBlaster Pro Compatible Sound System on the T2400CS and T2400CT can be configured to use interrupt levels 5, 7, 9 or 10.

** The built-in SCSI port on the T2400CS and T2400CT can be configured to use interrupt levels 9, 10 and 11.

Direct Memory Access Assignments

DMA Controller	Channel Number	DMA Assignment
1	0	Sound System*
	1	Sound System*
	2	Floppy Diskette Drive
	3	Reserved
2	4	Cascade for DMA Controller One
	5	Reserved
	6	Reserved
	7	Not Used

* The SoundBlaster Pro Compatible Sound System on the T2400CS and T2400CT can be configured to use direct memory access levels 0 or 1.

Input/Output Port Assignments

I/O Port Address	Device/Function
000(h) to 01F(h)	82C37 - DMA Controller One
020(h) to 03F(h)	82C59 - Programmable Interrupt Controller One
040(h) to 05F(h)	82C54 - Timer
060(h) to 06F(h)	Keyboard Controller
070(h)	NMI Mask Register
070(h) to 07F(h)	Real Time Clock
080(h) to 09F(h)	DMA Page Register
0A0(h) to 0BF(h)	82C59 - Programmable Interrupt Controller Two
0C0(h) to 0DF(h)	82C37 - DMA Controller Two
0E0(h) to 0EF(h)	Special Register
0F0(h) to 0F7(h)	Math Co-Processor
100(h) to 1EF(h)	VGA
1F0(h) to 1FF(h)	Hard Disk Controller
200(h) to 207(h)	Game Controller
208(h) to 21F(h)	Not Used
220(h) to 25F(h)	Sound System
260(h) to 277(h)	Not Used
278(h) to 27F(h)	Printer (LPT2:)
280(h) to 2F7(h)	Not Used
2F8(h) to 2FF(h)	COM2:
300(h) to 33F(h)	Not Used
340(h) to 35F(h)	SCSI Controller
360(h) to 377(h)	Not Used
378(h) to 37F(h)	Printer (LPT1:)
380(h) to 387(h)	Not Used
388(h) to 38B(h)	Sound System (OPL3)
38C(h) to 39F(h)	Not Used
3A0(h) to 3AF(h)	1st Bisynchronous Communications Port
3B0(h) to 3BF(h)	Monochrome Display Adapter / Printer (LPT3:)
3C0(h) to 3DF(h)	CGA, EGA and VGA
3E0(h) to 3EF(h)	Not Used
3F0(h) to 3F7(h)	Floppy Diskette Controller
3F8(h) to 3FF(h)	COM1:
400(h) to 47F(h)	Not Used
480(h) to 49F(h)	DMA High Page Register

T2450CT

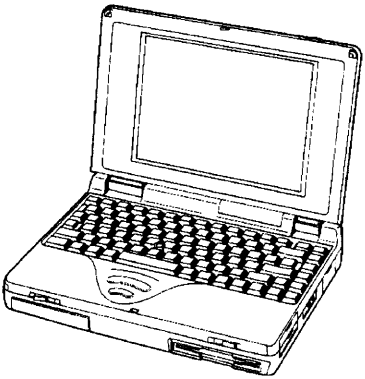

T2450CT Notebook

Section Index

Product Specifications 230
Mains Adapter and Battery Specifications 230
Product Features 230
Battery Release Procedure 231
Upgrade Procedures 231
  Memory Expansion Cards 231
  PCMCIA Cards 231
  Sound Card 231
Setup Screen Layout 232
FN-HotKey Functions 232
Disassembly Procedures 233
  Keyboard 233
  RTC Battery and Top Cover Assembly 233
  PCMCIA Card Board 233
  Hard Disk Drive 233
  Floppy Diskette Drive 233
  Speaker, Backup Battery and Display Unit 233
  LED Board, Display Board and Memory Board 233
  System Board 234
  Display Mask 234
  Microphone 234
  FL Inverter 235
  Display Module 236
Real Mode Memory Map 237
Interrupt Assignments 237
Direct Memory Access Assignments 237
Input/Output Port Assignments 237

T2450CT Notebook

Product Specifications

	T2450CT
Processor	i80486DX/4
Clock Speed	75MHz
Standard Memory	8MBytes
Maximum Memory	32MBytes
Hard Disk Drive	320/500Mb
Floppy Diskette Drive	1.44MBytes
Display Type	TFT Colour
Display Resolution	VGA/S-VGA
Display Colour Palette	65,536 Colours
Internal Modem Slot	Yes (PCMCIA)
Serial Port	Yes
Enhanced Parallel Port	Yes
Monitor Port	Yes
PS/2 Mouse Port	Yes
PS/2 Keyboard Port	Yes
Keyboard Type	84-Keys
DeskStation Expansion	Port Replicator Only
Maximum Battery Life	3.5 Hours
Weight (kg/lb)	3.0/6.6

Mains Adapter and Battery Specifications

Mains Adapter
Toshiba Part Number PA2430U
Output Rating 18 volts, 1.1 amps

Battery Pack
Toshiba Part Number PA2429U-R
Power Rating
2,600mA/hour, 12 volts DC

Product Features

* 3.3 Volt Processor Technology
* Processor Reset Button
* Resume Mode Provision
* Max-Time Power Management
* Advanced Power Management
* VESA Local Bus Graphics
* BitBlk Graphics Accelerator
* PCMCIA Type II Slot
* PCMCIA Type III Slot (14.5mm)
* Optional Sound System (SoundBlaster Pro Compatible)
* Integrated Microphone (With Sound System Only)
* AccuPoint Mouse
* 800x600x256 External S-VGA
* 1024x768x256 External S-VGA
* 65,536 Onscreen Colours
* Kensington Cable Lock
* HotLock Security
* NiH_2 Battery
* Flash BIOS Firmware

Please refer to the Appendices at the back of this booklet for a description of some of the features described above

Battery Release Procedure

The battery release procedure for the T2400CT is exactly the same as for the T2400. Please refer to the T2400 section for details on how to remove and install additional battery packs.

Upgrade Procedures

Memory Expansion Cards

The memory upgrade procedure for the T2400CT is exactly the same as for the T2400. Please refer to the T2400 section for details on how to install additional memory cards.

PCMCIA Cards

The PCMCIA card upgrade procedure for the T2400CT is exactly the same as for the T2400. Please refer to the T2400 section for details on how to install additional PCMCIA card options.

Sound Card

The sound card upgrade procedure for the T2400CT is exactly the same as for the T2400. Please refer to the T2400 section for details on how to install the SoundBlaster Pro compatible sound card option.

Setup Screen Layout

SYSTEM SETUP — BIOS version = x.xx

MEMORY		COM/PRT/SCSI/SOUND	
Total	= 8192KB	Serial Port	= COM1 (IRQ4/3F8H)
Base	= 640KB	Printer Port Type	= Output
Extended	= 7360KB	SCSI	= Enabled
Shadow BIOS ROM	= 192KB	Sound System	= Address/IRQ/DMA
DISPLAY		**PASSWORD**	
Display Adaptor	= VGA Compatible	Not Registered	
LCD Display Mode	= Color		
Ext. Scan Mode	= Interlace	**OTHERS**	
LCD Display Colors	= 180K Colors	Power-up Mode	= Boot
Power On Display	= Internal/External	CPU Cache	= Enabled
		Processing Speed	= High
BATTERY		Speaker Volume	= High
Battery Save Mode	= Full Power	Panel Power On/Off	= Disabled
Manual Set of Battery Level		Alarm Power On	= Disabled
	= EEEEEEEEF	Keyboard	= Layout/Fn
		Pointing Devices	= Auto-Selected
HARD DISK		Boot Priority	= FDD →HDD
HDD Mode	= Enhanced IDE(Normal)		

↑↓←→: Select Items, Space, BkSp : Change values
Esc: Exit without saving, Home: Set default values, End: Save changes and exit

Note 1:- The **Sound System** option is only diplayed when the SoundBlaster Pro compatible sound card is installed.

Note 2:- When selected, the **Sound System** option presents a sub-menu which affects the configuration of the installed sound card as follows:-

SOUND SYSTEM	
I/O Address	= 0220H
Interrupt Level	= IRQ7
DMA	= Channel 1

Note 3:- The **Panel Power On/Off** option only appears when the machine is configured to power-up in **Resume Mode**.

Note 4:- In addition to this basic setup screen information, there are a number of pre-configured settings associated with the **Battery Save Mode** option. When selected, these settings affect the way that the T2450CT manages its usage as follows:-

Low Power		Full Power	
CPU Sleep Mode	= Enabled	CPU Sleep Mode	= Disabled
Display Auto Off	= 03Min.	Display Auto Off	= 30Min.
HDD Auto Off	= 03Min.	HDD Auto Off	= Disabled
System Auto Off*	= 30Min.	System Auto Off*	= Disabled

* The **System Auto Off** option is offered only when the host system is configured for **Resume Mode** operation.

FN-HotKey Functions

The FN-HotKey functions for the T2450CT are exactly the same as for the T2400. Please refer to the T2400 section for details as to which configuration and setup changes can be made using this feature.

Keyboard
The keyboard disassembly procedure for the T2450CT is exactly the same as for the T2400. Please refer to the T2400 section for details on how to remove and refit the keyboard.

RTC Battery and Top Cover Assembly
The RTC battery and top cover assembly disassembly procedure for the T2450CT is exactly the same as for the T2400. Please refer to the T2400 section for details on how to remove and refit the RTC battery and top cover assembly.

PCMCIA Card Board
The PCMCIA card board disassembly procedure for the T2450CT is exactly the same as for the T2400. Please refer to the T2400 section for details on how to remove and refit the PCMCIA card board.

Hard Disk Drive
The hard disk drive disassembly procedure for the T2450CT is exactly the same as for the T2400 with the exception of the considerations as noted below. Please refer to the T2400 section, in conjunction with the below stated notes, for details on how to remove and refit the hard disk drive.

1) The HARD DISK DRIVE may be fitted with a removable foam rubber pad on its top edge immediately above the connector onto the SYSTEM BOARD. If this is the case then this pad must be replaced exactly as found.
2) The HARD DISK DRIVE may have positioned underneath it an additional clear plastic sheet with blue pads attached to it. If this is the case then this item must be replaced exactly as found.

Floppy Diskette Drive
The floppy diskette drive disassembly procedure for the T2450CT is exactly the same as for the T2400. Please refer to the T2400 section for details on how to remove and refit the floppy diskette drive.

Speaker, Backup Battery and Display Unit
The speaker, backup battery and display unit disassembly procedure for the T2450CT is exactly the same as for the T2400. Please refer to the T2400 section for details on how to remove and refit the speaker, backup battery and display unit.

LED Board, Display Board and Memory Board
The LED board, display board and memory board disassembly procedure for the T2450CT is exactly the same as for the T2400 with the exception of the consideration as noted below. Please refer to the T2400 section, in conjunction with the below stated notes, for details on how to remove and refit the LED board, display board and memory board.

1) The single screw (M2.5x6mm) detailed in step (12) also secures a small shielding plate over the top of the DISPLAY BOARD. This plate must be replaced exactly as found.

System Board
The system board disassembly procedure for the T2450CT is exactly the same as for the T2400. Please refer to the T2400 section for details on how to remove and refit the system board.

Display Mask
The display mask disassembly procedure for the T2450CT is exactly the same as for the T2400. Please refer to the T2400 section for details on how to remove and refit the display mask.

Microphone
The microphone disassembly procedure for the T2450CT is exactly the same as for the T2400. Please refer to the T2400 section for details on how to remove and refit the microphone.

FL Inverter

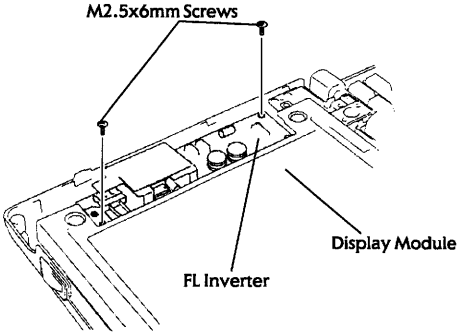

FIGURE ONE

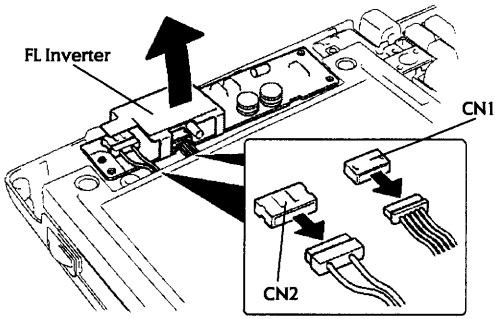

FIGURE TWO

1) Switch the T2450CT off and disconnect all interconnecting cables including the mains adapter.
2) Remove the BATTERY PACK as described earlier in this section.
3) Should they be installed, remove any PCMCIA cards as described earlier in this section.
4) Follow all instructions as detailed under the disassembly procedure **Display Mask** before proceeding.
5) If present, remove any tape securing either the FL INVERTER cable and/or the fluorescent lamp cable.
6) Remove the two screws (M2.5x6mm) securing the FL INVERTER and carefully lift it out of the display assembly to fully expose the connectors (FIGURE ONE).
7) Disconnect the FL INVERTER cable from CN1, the fluorescent lamp cable from CN2 and remove the FL INVERTER from the display assembly (FIGURE TWO).
8) Refit the FL INVERTER in reverse order.

Display Module

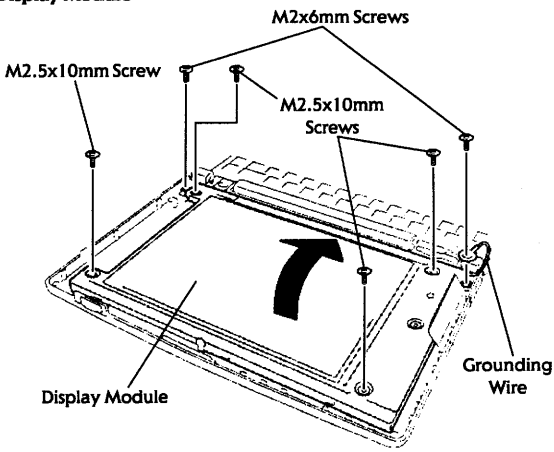

FIGURE THREE

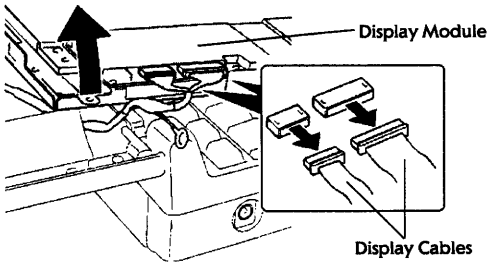

FIGURE FOUR

1) Switch the T2450CT off and disconnect all interconnecting cables including the mains adapter.
2) Remove the BATTERY PACK as described earlier in this section.
3) Should they be installed, remove any PCMCIA cards as described earlier in this section.
4) Follow all instructions as detailed under the disassembly procedures **Display Mask** and **FL Inverter** before proceeding.
5) Remove the six screws (M2x6mm and M2.5x10mm) securing the DISPLAY MODULE noting that one M2x6mm screw also secures a GROUNDING WIRE (FIGURE THREE).
6) Carefully pivot the DISPLAY MODULE out of the display assembly to lie on top of the KEYBOARD (FIGURE FOUR).
7) Disconnect the two DISPLAY CABLES from the back of the DISPLAY MODULE and remove it from the display assembly (FIGURE FOUR).
8) Refit the DISPLAY MODULE in reverse order ensuring that the GROUNDING WIRE is attached correctly.

Real Mode Memory Map

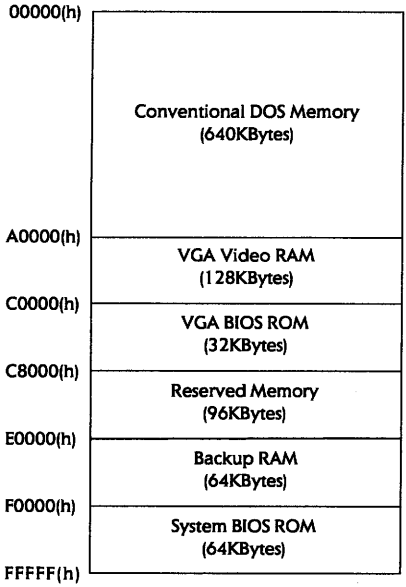

Interrupt Assignments

The interrupt assignments for the T2450CT are exactly the same as for the T2400 range. Please refer to the T2400 section for details on how interrupts are assigned.

Direct Memory Access Assignments

The direct memory access assignments for the T2450CT are exactly the same as for the T2400 range. Please refer to the T2400 section for details on how direct memory access channels are assigned.

Input/Output Port Assignments

The input/output port assignments for the T2450CT are exactly the same as for the T2400 range. Please refer to the T2400 section for details on how input/output ports are assigned.

This page is intentionally left blank

All registered trademarks are acknowledged
Design specifications subject to change without notice
E & OE